March 2007 rev. 2B

QUBICAAMF

THE POWER OF PARTNERSHIP

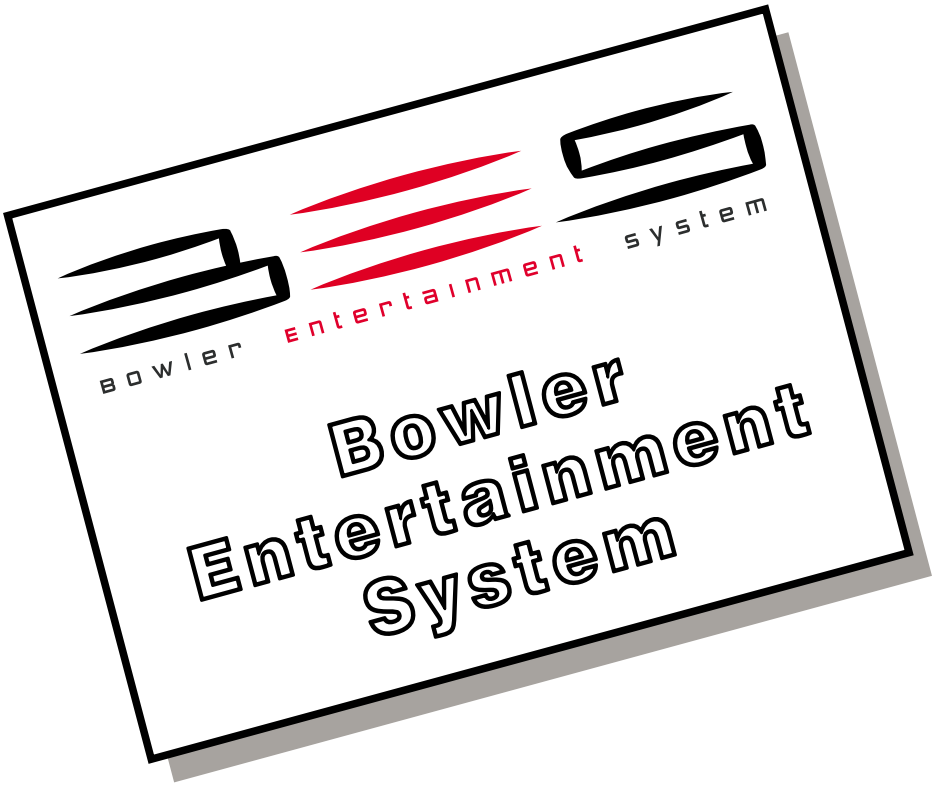

PRE - INSTALLATION MANUAL

QUBICAAMF Europe

Bologna - ITALY

Phone: +39 051 - 4192611

Fax: +39 051 - 4192602

web: www.QubicaAMF.com

e-mail: mailbox@QubicaAMF.com

TABLE OF CONTENTS

General Installation Notes

For devices directly connected to the power, it is necessary to check that the electrical capacity of the system is suitable for the maximum power requirements of the equipment (as indicated in the labels on the back of the equipment).

Be aware of the voltage being supplied to the equipment (i.e. 110V or 220V) and that the equipment is set for the correct voltage.

Failure to set the equipment for the correct voltage will result in damage to the equipment.

The electrical safety of the equipment is obtained only when the equipment is connected to an effective GROUNDING SYSTEM (in accordance with the existing electrical codes and safety regulations).

It is necessary to have the power and grounding inspected by a licensed and certified electrician.

The manufacturer cannot be responsible for possible injury, damages or malfunctioning of the equipment due to the absence of or improper grounding of the equipment.

Always open the circuit breaker and disconnect the power plug from the powered units before looking for, and clearing, any problem.

To reduce the risk of fire or electrical shock, do not expose this equipment to moisture.

This appliance must be positioned such that the mains supply cord connector is accessible after installation.

A. Electrical Requirements

The bowling center proprietor is responsible for the materials and installation of all AC and grounding requirements. All electrical installations must conform to all local and state codes, statutes or standards defined by local jurisdiction and/or inspections.

All electrical circuit panels should be installed using a dedicated distribution circuit panel with an isolated third wire (green) equipment tie down buss. These circuits must not share a panel that is or will be used as a power source for any device other than Qubica automatic scoring equipment. The dedicated distribution panel should get its power source from at least a building main sub panel, but the main panel is recommended.

Where TV is used, check that the antenna or CATV cable are properly grounded.

Dedicated panel to service entrance ground buss is restrictive as follows:

- If the total length of the buss is 200 feet or less, use a number 6 AWG – 4 mm Ø wire for entire buss.
- If the total length of the buss is 200 feet to 400 feet, use two sections. Use number 4 AWG - 5 mm Ø wire for the first section from the ground connection to the first unit, then use number 6 AWG - 4 mm Ø wire for the remainder.

A.1 System Components

A.1.1 RDB Graphic Unit

A dedicated 120V 20A - 240V 10A 50/60 Hz circuit for each couple of RDB units (4 lanes) is required.

US Only - Three wire circuit with continuous insulated third wire (Green) equipment ground connecting to the service entrance positive earth ground for each group of four lanes is required.

Use no wire smaller than number 12 AWG - 2 mm Ø , rated at 600 Volts.

RDB electrical specs: 100-240V, 1.6-0.6A, 50-60Hz.

A.1.2 RDB Graphic Unit with LCD Consoles

A dedicated 120V 20A - 240V 10A 50/60 Hz circuit for each couple of RDB units (4 lanes) is required.

US Only - Three wire circuit with continuous insulated third wire (Green) equipment ground connecting to the service entrance positive earth ground for each group of four lanes is required.

Use no wire smaller than number 12 AWG - 2 mm Ø , rated at 600 Volts.

RDB electrical specs: 100-240V, 1.6-0.6A, 50-60Hz.

The LCD Consoles are powered by the Q-AC-PWR located on the curtain wall

A.1.3 RDB Network

A dedicated 120V 20A - 240V 10A 50/60 Hz circuit for for each group of thirty lanes or each separate group of lanes is required.

US Only - Three wire circuit with continuous insulated third wire (Green) equipment ground connecting to the service entrance positive earth ground for each group of four lanes is required.

Use no wire smaller than number 12 AWG - 2 mm Ø , rated at 600 Volts.

A.1.4 Overhead Monitors

A dedicated 120V 20A - 240V 10A 50/60 Hz circuit for for each group of four lanes is required.

US Only - Three wire circuit with continuous insulated third wire (Green) equipment ground connecting to the service entrance positive earth ground for each group of four lanes is required.

Use no wire smaller than number 12 AWG - 2 mm Ø , rated at 600 Volts.

A twist lock plug or 3 prong ground male plug must be provided to attach to the monitor power cord in order the match the twist lock or grounded receptacle located above the overhead housing. Each pair of monitors requires 7.5 Amps of power.

Maximum power consumption of a single Overhead Monitor is 100 Watts.

A.1.5 Front Desk Computer

Provisions are required at the control desk to locate the front desk computer, monitor, UPS and any peripherals being installed for this terminal. (Qubica will provide (1) UPS per front desk station - only U.S. market)

A dedicated 120V 20A - 240V 10A 50/60 Hz circuit is required for the front desk.

Use no wire smaller than number 12 AWG - 2 mm Ø , rated at 600 Volts.

U.S. only - A three wire dedicated 120V 20A - 240V 10A p 50/60 Hz circuit with an isolated ground outlet is required. This outlet must have a continuous, insulated, third wire (green) equipment ground connecting to the service entrance positive earth ground only. This circuit shall not be connected to or used by any other equipment other than the equipment described above. Each front desk system requires 6 Amps of power.

Maximum power consumption of Front Desk PC plus Monitor is 500 Watts.

A single power line must be set up for each Front Desk or Back Office Computer.

A.1.6 Back Office Computer

Provisions are required in the back office to locate the back office computer, monitor, UPS and any peripherals being installed for this terminal. (Qubica will provide (1) UPS per back office station - only U.S. market)

A dedicated 120V 20A - 240V 10A 50/60 Hz circuit is required for the back office.

Use no wire smaller than number 12 AWG - 2 mm Ø , rated at 600 Volts.

U.S. only - A three wire dedicated 120V 20A - 240V 10A p 50/60 Hz circuit with an isolated ground outlet is required. This outlet must have a continuous, insulated, third wire (green) equipment ground connecting to the service entrance positive earth ground only. This circuit shall not be connected to or used by any other equipment other than the equipment described above. Each back office system requires 6 Amps of power.

Maximum power consumption of Back Office PC plus Monitor is 500 Watts.

A single power line must be set up for each Front Desk or Back Office Computer.

A.1.7 XS Bumpers

A dedicated 120V 20A - 240V 10A 50/60 Hz circuit is required for each group of 24 lanes (12 pairs).

Use no wire smaller than number 12 AWG - 2 mm Ø , rated at 600 Volts.

U.S. only - A three-wire 120V 20A - 240V 10A 50/60 Hz circuit with a continuous, insulated, third wire (green) equipment ground connecting to the service entrance positive earth ground for each group of 24 lanes (12 pairs) is required. A grounded duplex outlet receptacle, such as Hubbell type, located at on the pinsetter side of the curtain wall, centered on a 24-lane section, is required. The transformer supplied by Qubica will utilize this receptacle.

A.1.8 TMR - Foul Lights

A dedicated 120V 20A - 240V 10A 50/60 Hz circuit is required for each group of 8 lanes (4 pairs of lanes).

Use no wire smaller than number 12 AWG - 2 mm Ø , rated at 600 Volts.

U.S. only - A three-wire 120V 20A - 240V 10A 50/60 Hz circuit with a continuous, insulated, third wire (green) equipment ground connecting to the service entrance positive earth ground for each each group of 8 lanes (4 pairs) is required. A grounded duplex outlet receptacle, such as Hubbell type, should be located approximately 18” beyond the foul line toward the pinspotters. This receptacle box is to be mounted to the double division capping support beneath the ball return cover board. The transformer supplied by Qubica will utilize this receptacle.

A.1.9 TCS Q-DAC unit

A dedicated 120V 20A - 240V 10A 50/60 Hz circuit is required for each group of 60 lanes (30 pairs).

Use no wire smaller than number 12 AWG - 2 mm Ø , rated at 600 Volts.

U.S. only - A three wire, dedicated 120V 20A - 240V 10A 50/60 Hz circuit with a continuous, insulated third wire (Green) equipment ground connecting to the service entrance positive earth ground is required.

A single power line must be set up every 60 lanes.

Q-DAC Unit electrical specs: 115-230V, 0.7-0.35A, 50-60Hz.

A.1.10 Q-COM Q-DAC unit

A dedicated 120V 20A - 240V 10A 50/60 Hz circuit is required for each group of 48-96 lanes, depending on the installation.

Use no wire smaller than number 12 AWG - 2 mm Ø , rated at 600 Volts.

U.S. only - A three wire, dedicated 120V 20A - 240V 10A 50/60 Hz circuit with a continuous, insulated third wire (Green) equipment ground connecting to the service entrance positive earth ground is required.

A single power line must be set up every 48-96 lanes, depending on the installation.

Q-DAC Unit electrical specs: 115-230V, 0.7-0.35A, 50-60Hz.

A.1.11 MMS unit

A dedicated 120V 20A - 240V 10A 50/60 Hz circuit is required for MMS unit.

Use no wire smaller than number 12 AWG - 2 mm Ø , rated at 600 Volts.

U.S. only - A three wire, dedicated 120V 20A - 240V 10A 50/60 Hz circuit with a continuous, insulated third wire (Green) equipment ground connecting to the service entrance positive earth ground is required.

MMS Unit electrical specs: 100-240V, 1.6-0.6A, 50-60Hz.

A.1.12 Action Replay

The Action Replay unit can be connected to the RDB line.

A.2 Suggested Ground Connection

Preface:

The recommended electric plant for the score is one based on one and only one ground to which are connected all the ground circuits of the plant (Front desk, Over Head Monitors, RDB etc...).

If the score installation has used or adapted the already present electric plant of the bowling building, this can be cause of problems with the monitor images, mainly due to a bad ground.

During the score installation on the pair of lanes, there can be different connections to ground, which depend on the electrical wiring of the bowling center.

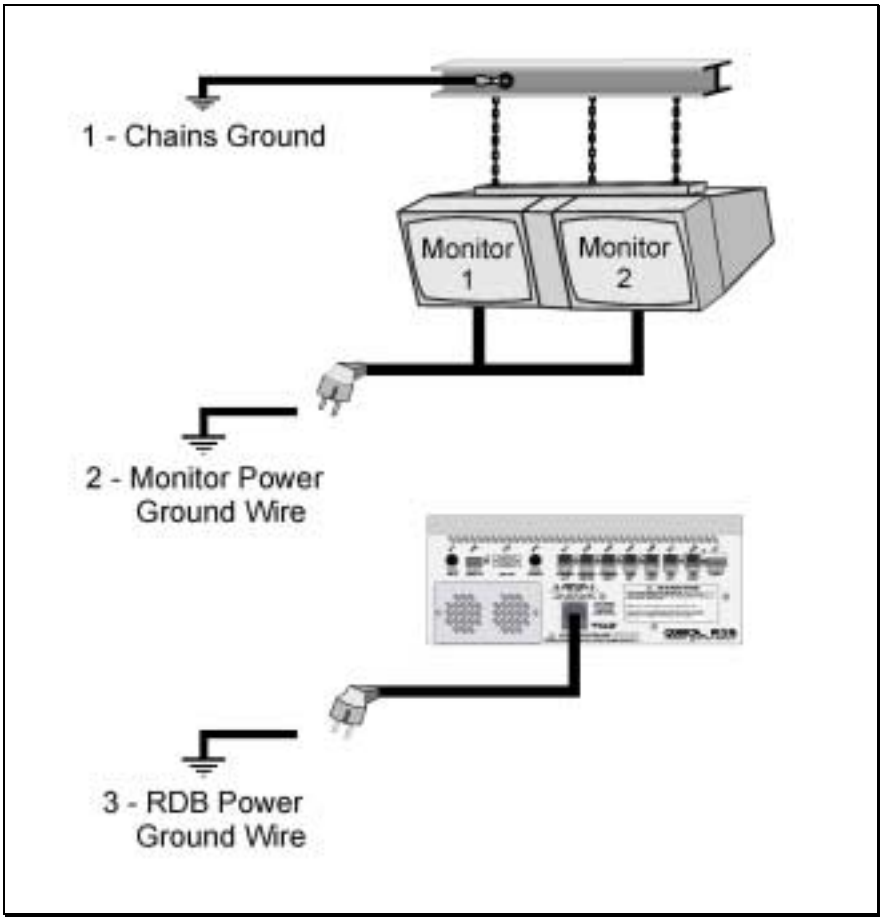

Ground 1: Ground normally connected to the monitor chains (if any)

Ground 2: Ground cable connected to the monitor through the power supply cables

Ground 3: Ground cable connected to the RDB through the power supply cable

If the four grounds are ever at different voltage levels, this can cause serious disturbances to the system. In particular, a slight voltage variation between points 2 and 3 could cause a very visible disturbance on the monitors.

To avoid this kind of problem the installations MUST always have ground points 2 and 3 connected together as illustrated in the following diagram.

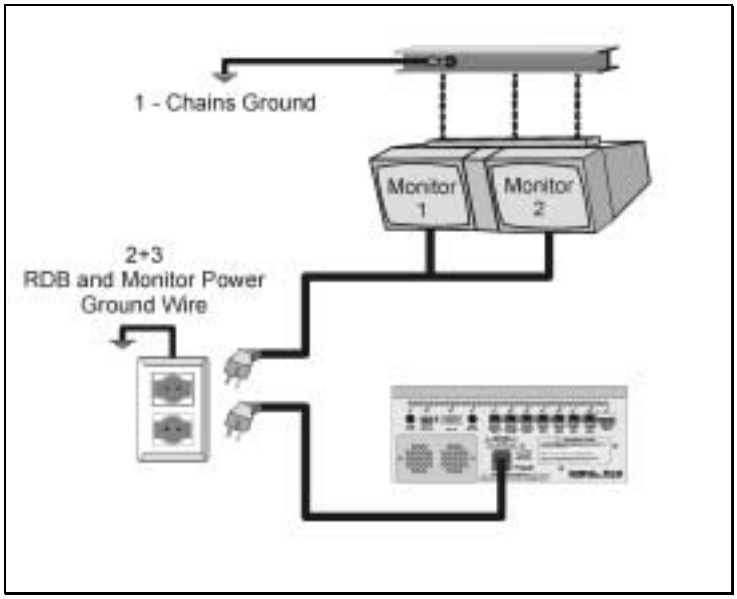

However, in the case of very strong disturbances between points 1 and 2+3, disturbances could still appear on the monitors. In this case, given that the problem appears just because of strong disturbances, the real reason is that the ground of the bowling building is in bad condition. You must take into account an incorrect connection of the neutral on the metal support structure through the chains or any other possible bad ground conditions in the bowling building.

In order to find out which ground is causing the problem, follow the instructions illustrated below:

- You have to eliminate any other connections and check the screen with only the RDB and monitor power cable connected (obviously leaving the signal cables connected). See the diagram below.

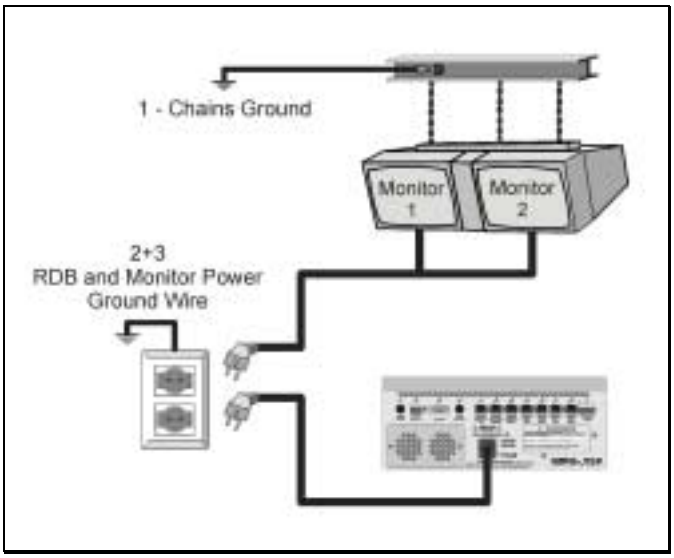

Following the diagram illustrated above it is clear that the only two grounds connected are the metal structure (1) and the power supply cable ground (2+3).

- Turn on the monitor and the RDB.
- If is all right go to step Communication cable connection.
- If there are still problems, the following two solutions are advised

Solution 1: Isolated chains

Isolating the chains of the metal structure one obtains a separation of grounds 1 and 2+3. The isolating of ground 1 allows the system to be worked upon with only grounds 2+3. In this way the RDB, the monitor electronics and part of the metal structure work with the same ground.

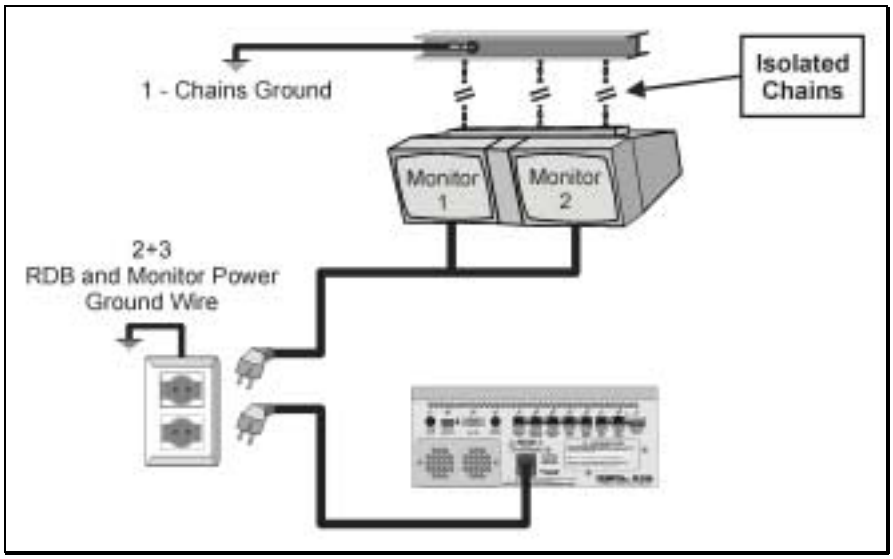

Solution 2: Ground 1 & 2+3 connection

Another possible solution could be to try to connect the ground of the metal structure to the ground of the power. This solution has the advantage of not necessitating the isolation of the chains.

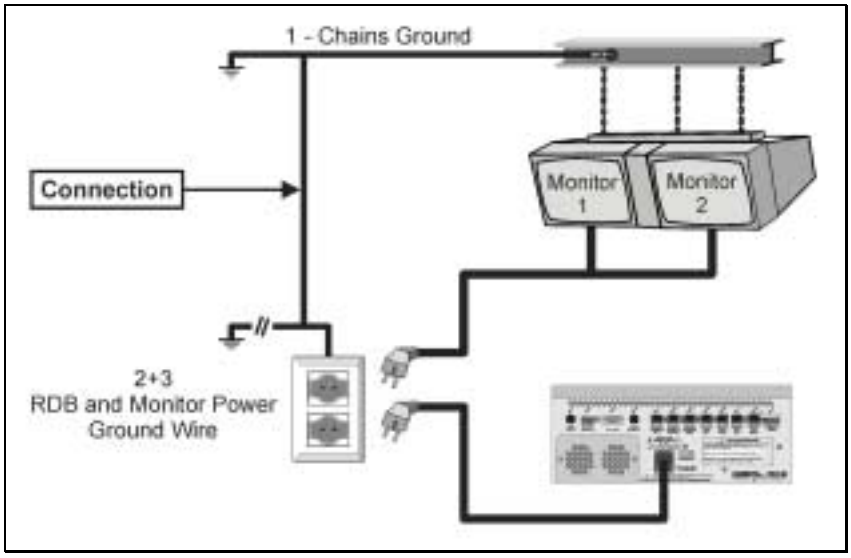

INDICATIVE POWER CONSUMPTIONS

SINGLE OVERHEAD MONITOR:
MAX 100W
(INRUSH CURRENT :
20A - 120V / 10A - 220V)

RDB GRAPHIC UNIT:
MAX 100W
(INRUSH CURRENT:
20A - 120V / 10A - 220V)

FRONT DESK OR BACK OFFICE COMPUTER: MAX 400W
(INRUSH CURRENT:
20A - 120V / 10A - 220V)

RDB NETWORK HUB:
(INRUSH CURRENT:
20A - 120V / 10A - 220V)

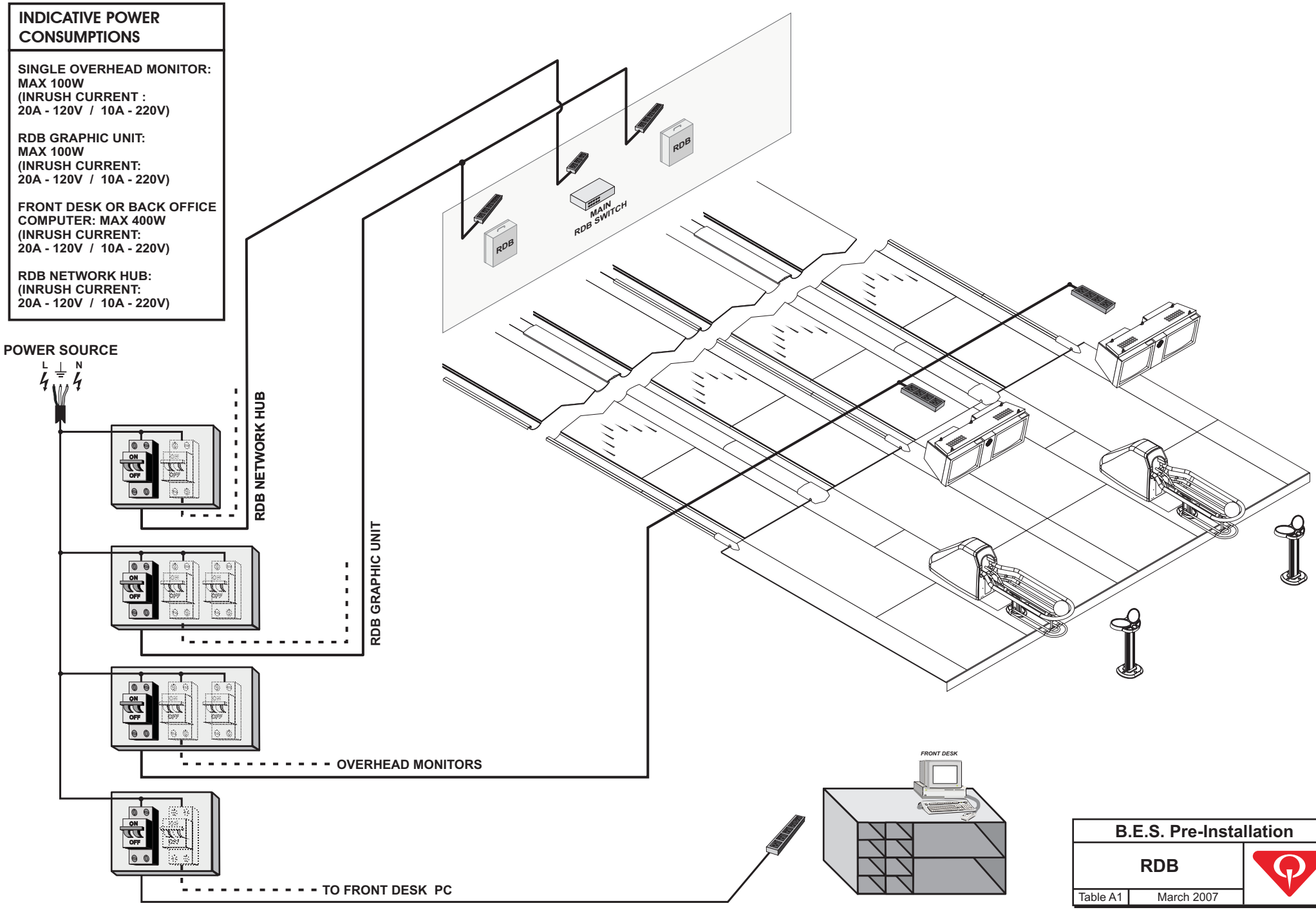

B.E.S. Pre-Installation	
RDB	
Table A1	March 2007

INDICATIVE POWER CONSUMPTIONS

SINGLE OVERHEAD MONITOR:
MAX 100W
(INRUSH CURRENT :
20A - 120V / 10A - 220V)

RDB GRAPHIC UNIT:
MAX 100W
(INRUSH CURRENT:
20A - 120V / 10A - 220V)

FRONT DESK OR BACK OFFICE COMPUTER: MAX 400W
(INRUSH CURRENT:
20A - 120V / 10A - 220V)

RDB NETWORK HUB:
(INRUSH CURRENT:
20A - 120V / 10A - 220V)

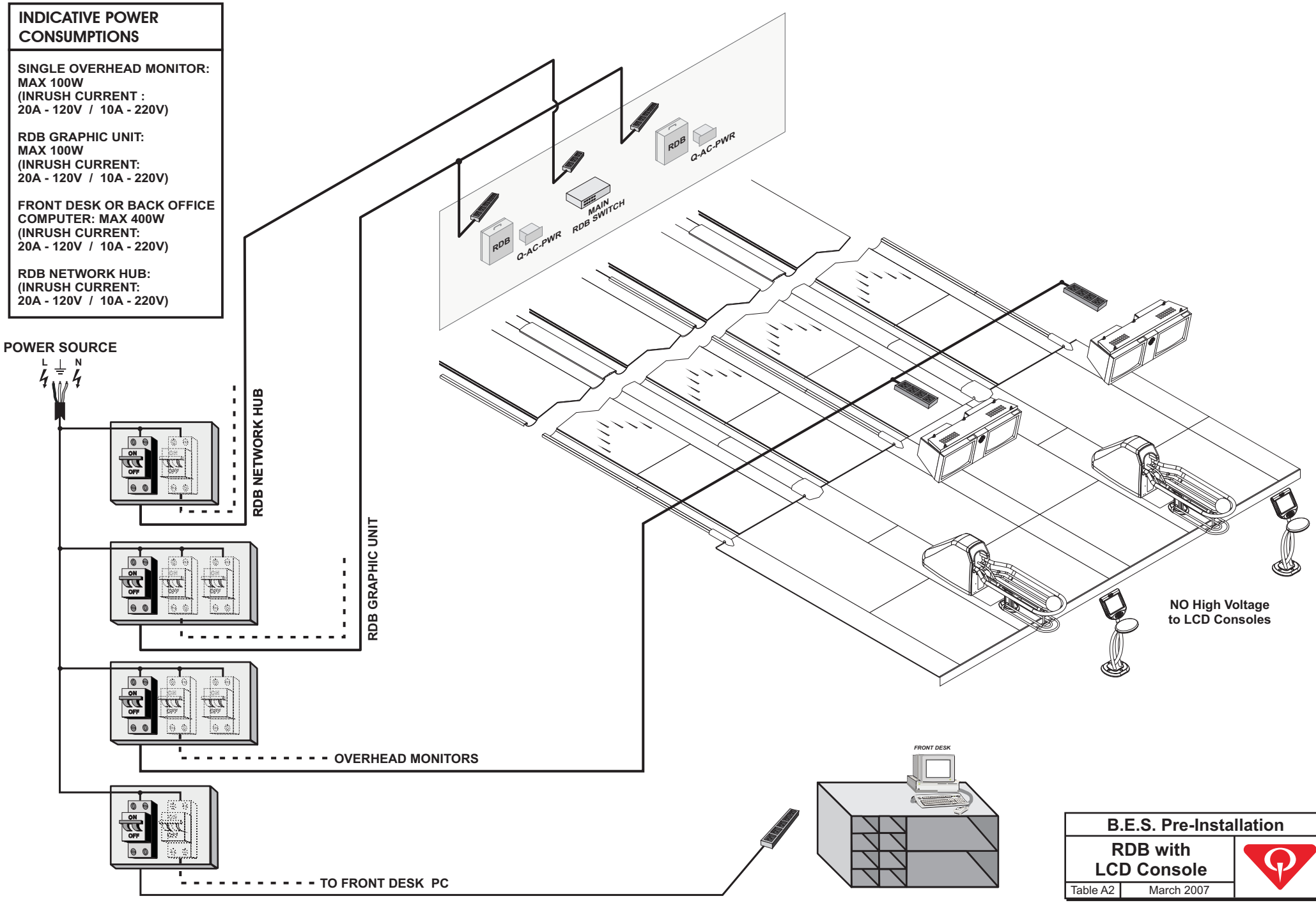

B.E.S. Pre-Installation	
RDB with LCD Console	
Table A2	March 2007

INDICATIVE POWER CONSUMPTIONS :

FRONT DESK PC:
MAX 400W
(INRUSH CURRENT:
20A - 120V / 10A - 220V)

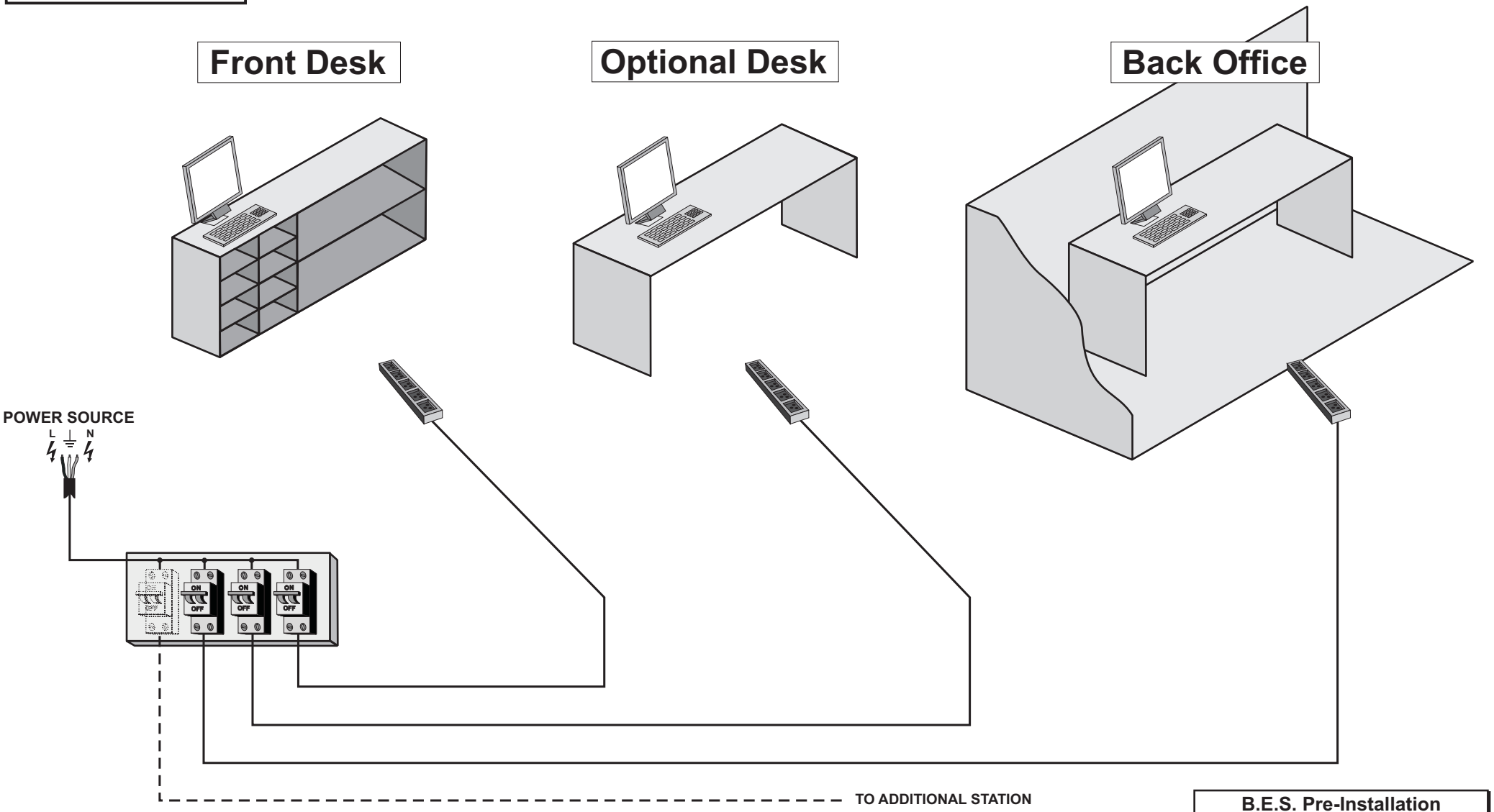

B.E.S. Pre-Installation

Front Desk and Back Office

Table A3 | March 2007

INDICATIVE POWER CONSUMPTIONS :

BUMPER INTERFACE:
(INRUSH CURRENT:
20A - 120V / 10A - 220V)

AIR COMPRESSOR:
(INRUSH CURRENT :
20A - 120V / 10A - 220V)

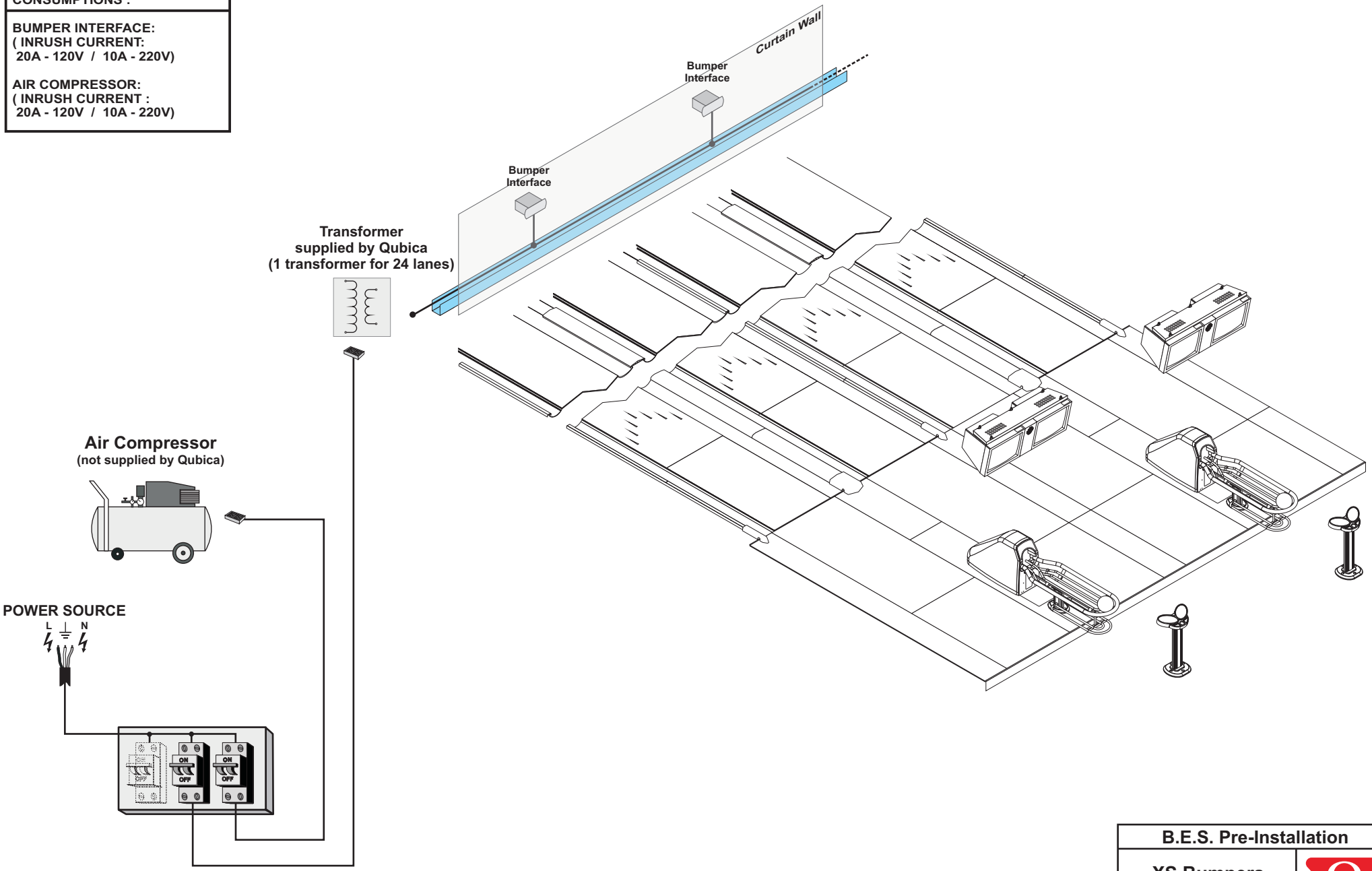

B.E.S. Pre-Installation	
XS Bumpers	
Table A4	March 2007

INDICATIVE POWER CONSUMPTIONS :

FOUL LIGHT:
(INRUSH CURRENT:
20A - 120V / 10A - 220V)

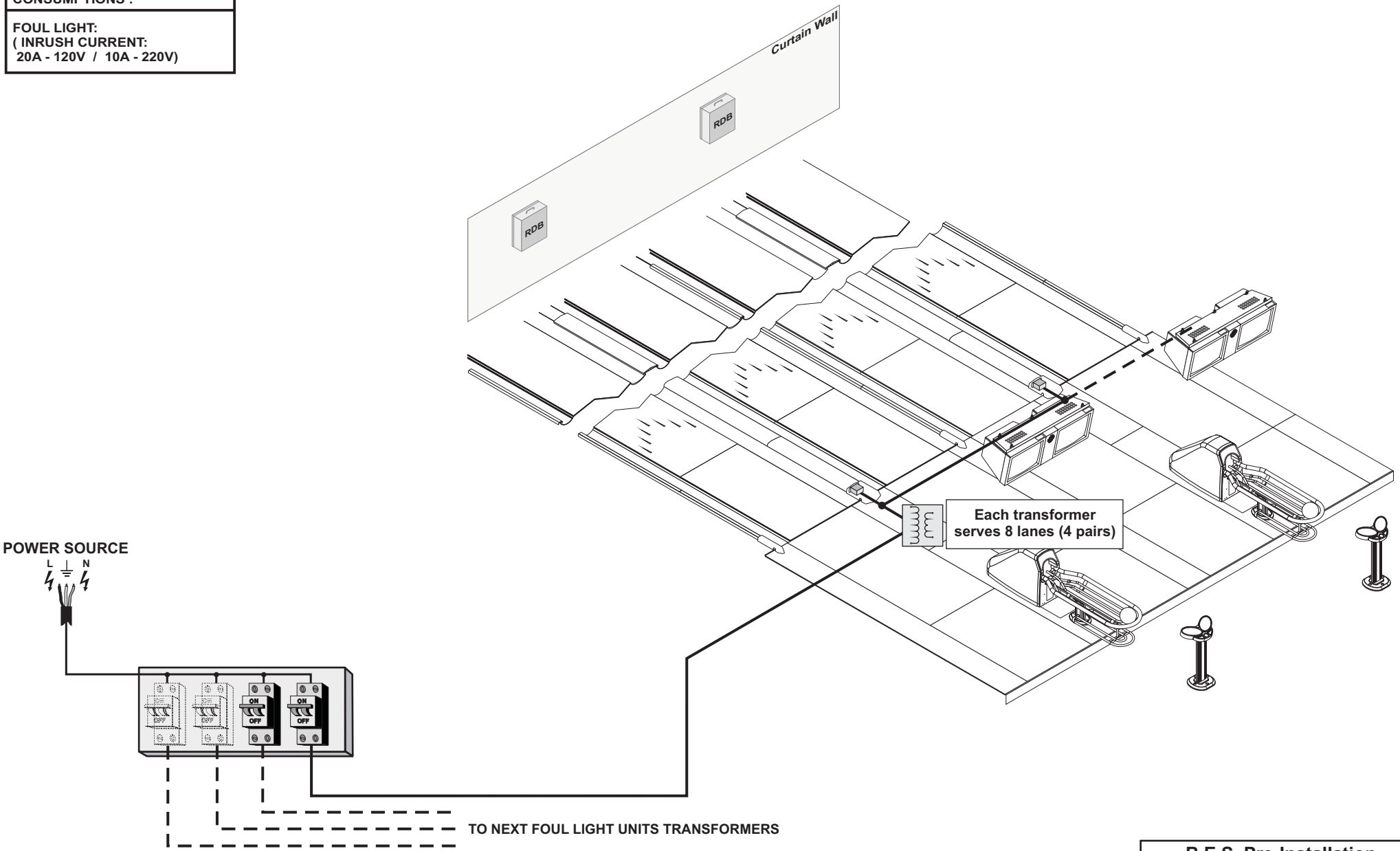

B.E.S. Pre-Installation	
QBK-TMR Foul Line	
Table A5	March 2007

INDICATIVE POWER CONSUMPTIONS

TCS Q-DAC:
MAX 100W
(INRUSH CURRENT :
20A - 120V / 10A - 220V)

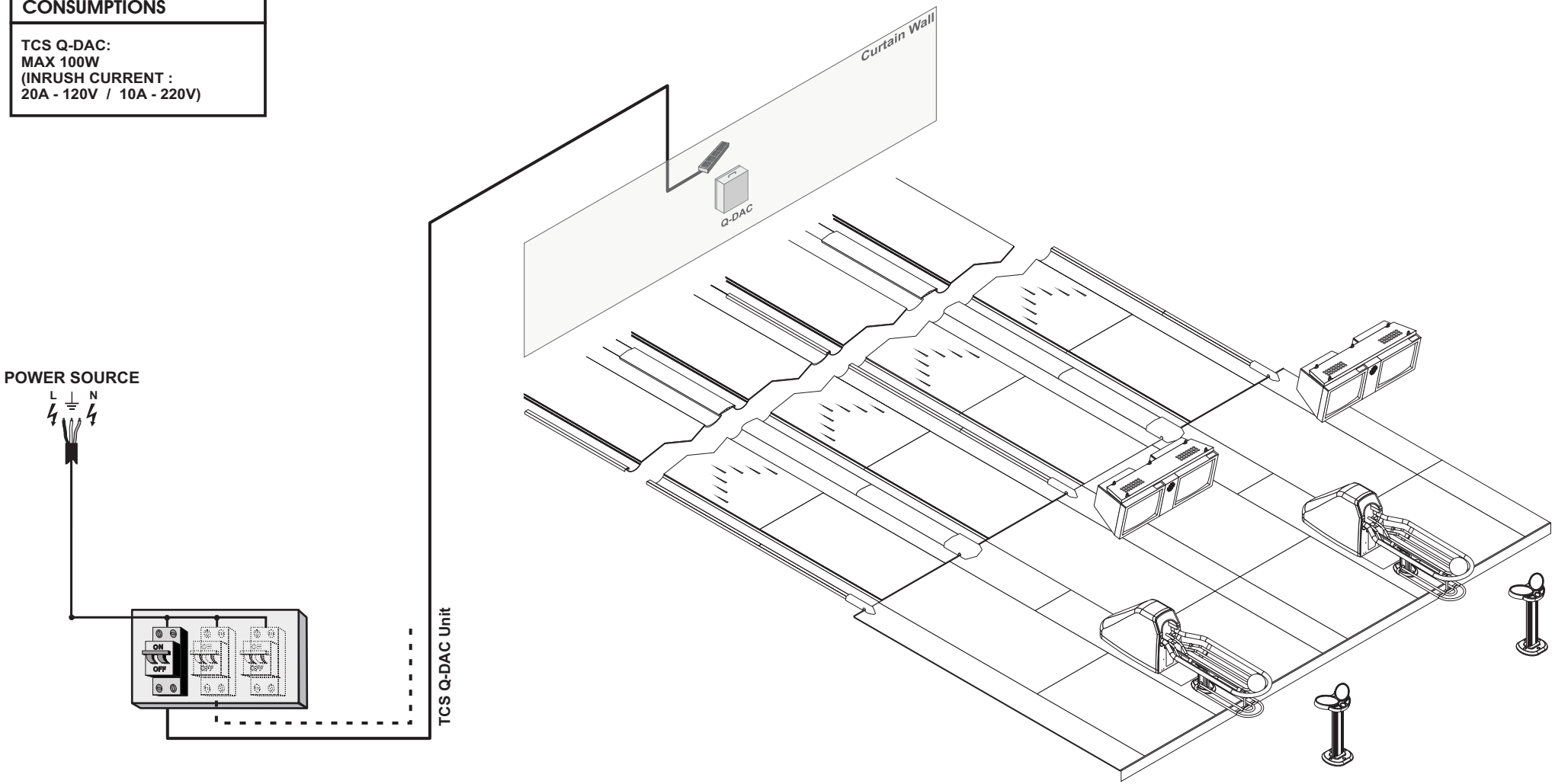

B.E.S. Pre-Installation	
TCS Q-DAC	
Table A6	March 2007

INDICATIVE POWER CONSUMPTIONS

Q-COM Q-DAC:
MAX 100W
(INRUSH CURRENT :
20A - 120V / 10A - 220V)

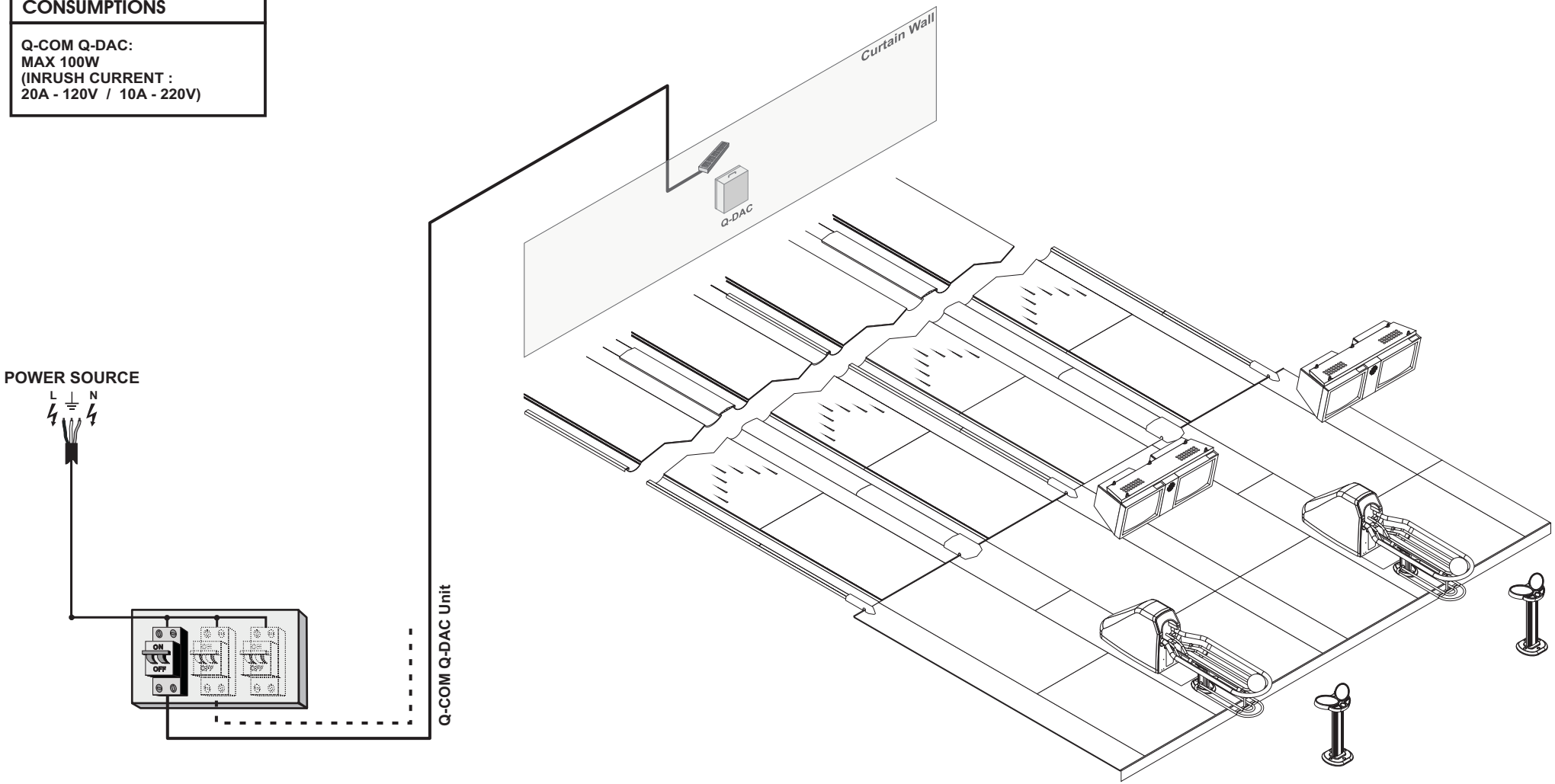

B.E.S. Pre-Installation

Q-COM Q-DAC

Table A7	March 2007

B. Communications

B.1 RDB Unit Network Connections

RDB units operate on a standard network, made of standard network cables and a network hub.

RDB units are connected through a Main RDB Network Switch, that links all the RDB units together with the second network card of the Front Desk PC.

Qubica supplies RDB Network Switches with 16 ports, this poses a physical connection limit to 30 lanes: 15 RDB units plus the Front Desk connection. Qubica also supplies the network cables needed for the installation, each cable's length is dimensioned according to the distance between each RDB unit and the Network Switch.

The connection between the Main RDB Network Switch and the Front Desk operates on a standard network cable, that must not exceed 300 feet – 100 m. Qubica supplies a 300 feet-long Cat.5 Network cable for the installation.

B.1.1 RDB Network in centers with more than 30 lanes

If the bowling center has more than 30 lanes, or if the lanes are divided in two or more groups, additional RDB switches that act as slaves are needed.

The lanes' groups must be equally balanced in homogeneous groups. Qubica supplies the additional switches and the network cables.

> Example : a bowling center with 34 lanes is split into two sub-centers, one with 18 lanes and the other with 16 lanes. Qubica supplies the Main RDB Switch, the two additional slave switches, one kit of cables for a 18 lanes center, one kit for a 16 lanes center and three Cat.5 300 feet – 90m cable coils, one for each switch (1 main, 2 slave).

The Slave switches must be connected to the Main RDB Switch in UPLINK mode. UPLINK mode is automatically set in switches supplied by Qubica, other switches may need a manual setting.

When multiple switches are involved it is mandatory not to connect any RDB directly to the Main RDB Switch, between each RDB and the Front Desk PC there must always be the same number of switches, and these switches must never exceed the number of two.

The network kits are supplied with some extra spare RJ45 connectors and caps, to be used to repair damaged cables. Installers should have a spare set of RJ45 connectors, the specific tools needed for the job and a network tester.

Qubica suggests the installation of a cables' conduct along the whole length of the curtain wall, to accommodate the network and the audio-video cables.

B.2 Console Connections

The connection between the RDB on the curtain wall of the center and the lane consoles on the front side is made with standard network cables, supplied by Qubica.

NOTE: The signals running through the console cables are not standard network signals, DO NOT CONNECT the console cables to standard network equipment.

Each console has its own cable coming out from the RDB unit. It is suggested to lay a conduct for cables under the cappings. This conduct will also accommodate the L-COM cabling towards the T-Vision, and the Q-Foul units.

B.3 Front Desk Network Connections

The connection between the RDB Network and the Front Desk PC is made through a standard network cable. The cable goes from the main RDB Switch to the second network card installed on the Front Desk PC.

The RDB network is separated from the PC network, and it has a different IP matrix.

In standard installations the PC network standard IP address matrix is 192.168.1.xx, while the RDB network has 192.168.10.1xx.

Every PC supplied by Qubica has a second security network card, but only the Front Desk PC can be connected to the RDB network, where the MxServer is running.

B.4 L-COM Connections

The connection between RDB units and Pinsetter Interfaces, Tvision Unit, Bumper Interfaces and Q-Foulis made through the 4-wire cable L-COM line.

The recommended size for L-COM wires is AWG 21 - 0.75mm² Ø for the power carrying wires and AWG 32 - 0.2mm² Ø for the communication wires.

The AWG 21 - 0.75mm² Ø wire can be used also for the communication wire.

Qubica supplies 60 feet – 18m of L-COM cable.

As pinsetter interfaces and bumper interfaces are mounted on the curtain wall, or in other locations near the RDB, there is no need for long cable connection between them.

The connection between RDB and Tvision requires the laying of a L-COM cable from the RDB through the capping to the Tvision.

B.5 Overhead Monitor Connections

The connection between the RDB on the back-end side of the center and the overhead monitor interface on the front-side is made with standard network cables, supplied by Qubica.

NOTE: The signals running through the monitor cables are not standard network signals, DO NOT CONNECT the monitor cables to standard network equipment.

Each monitor has its own cable coming out from the RDB unit. It is suggested to lay a conduct for cables in the false ceiling, one conduct for each pair of lanes.

Standard cable length for overhead monitor connections is 100 feet – 30 m. If longer cables are needed please notify Qubica before the making the order.

B.6 Audio Video Connections

Connections between the RDB units and the Audio and Video Source are made through commercial audio and video cables.

Audio Line: 2 x 0.25mm Shielded Cable.

Video Line: RG59 Coaxial Cable.

Lay the appropriate conducts between the Audio.Video Source and the Curtain Wall and use the Network Conduit along the whole length of the curtain wall.

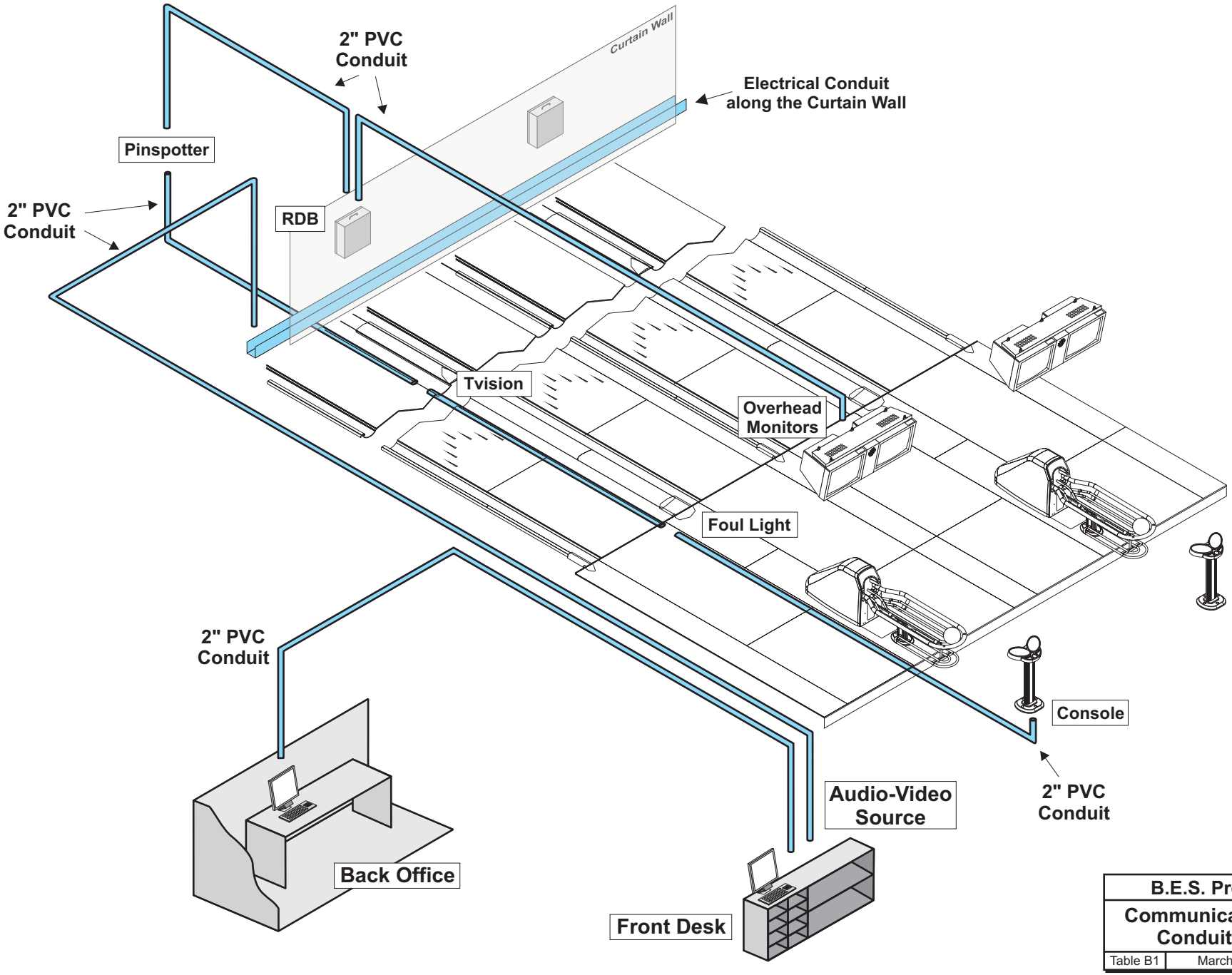

B.E.S. Pre-Installation	
Communication Conduits	
Table B1	March 2007

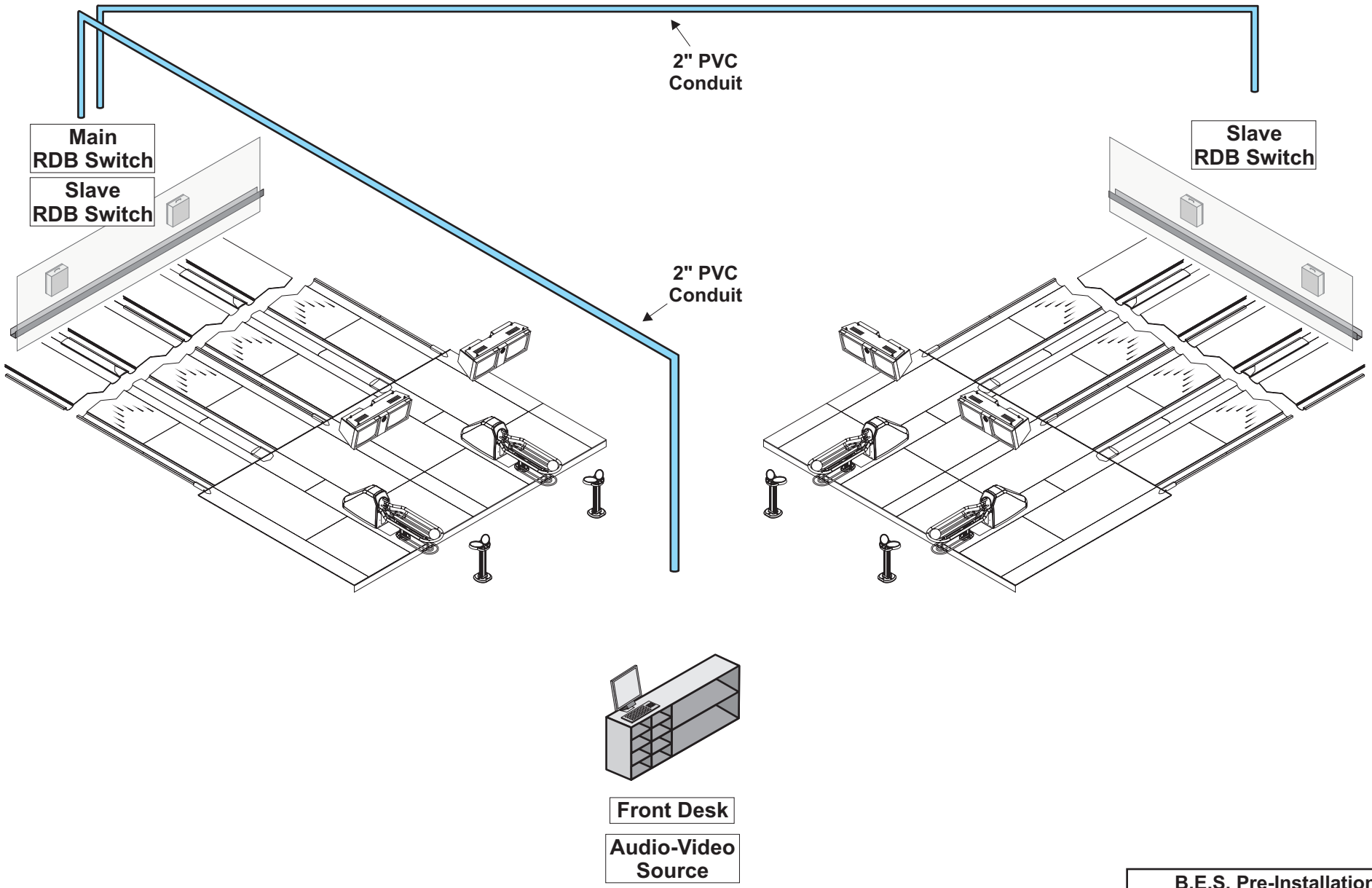

B.E.S. Pre-Installation	
Conduits for Separated Groups	
Table B2	March 2007

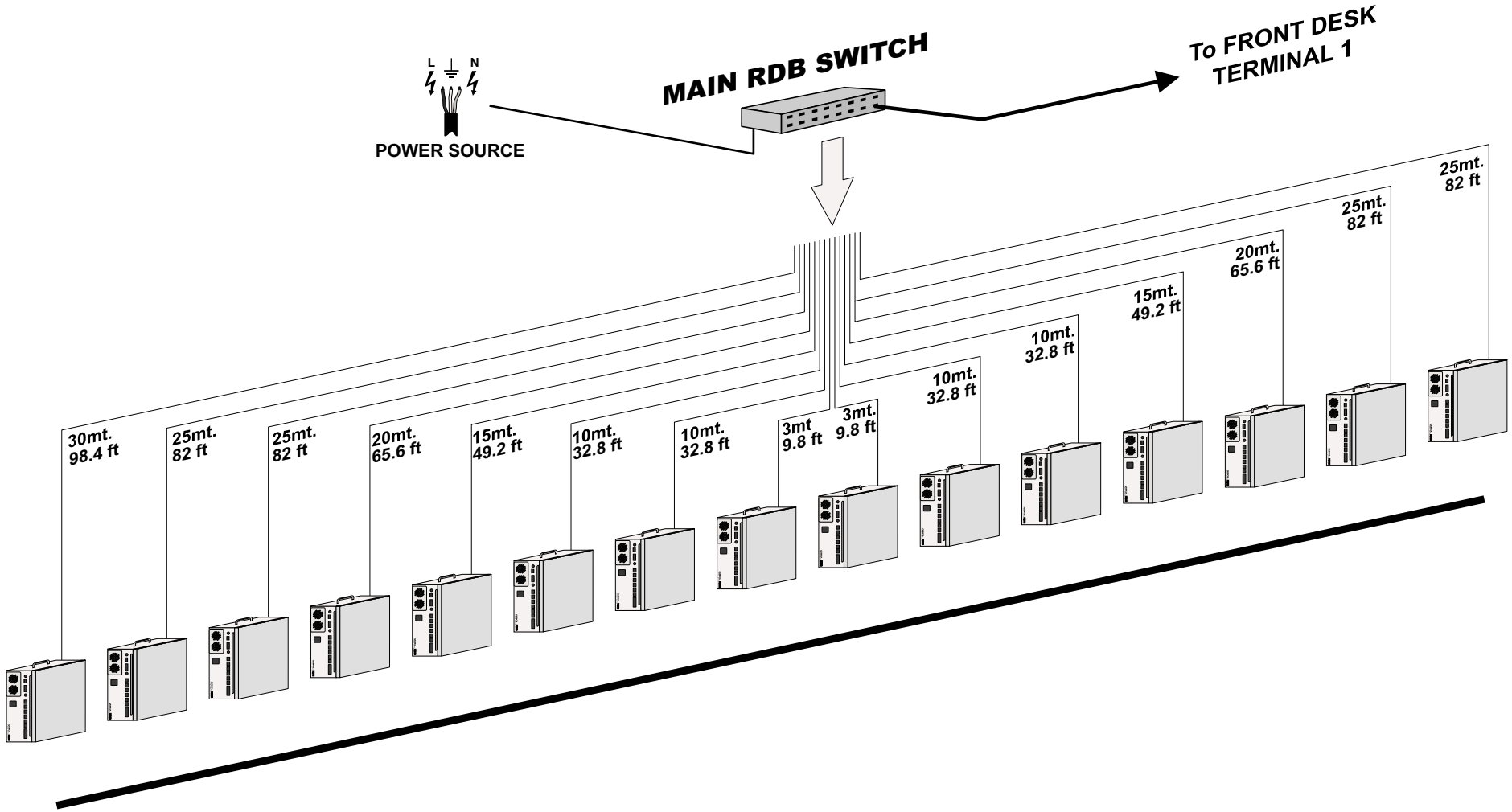

B.E.S. Pre-Installation	
RDB Network	
Table B3	March 2007

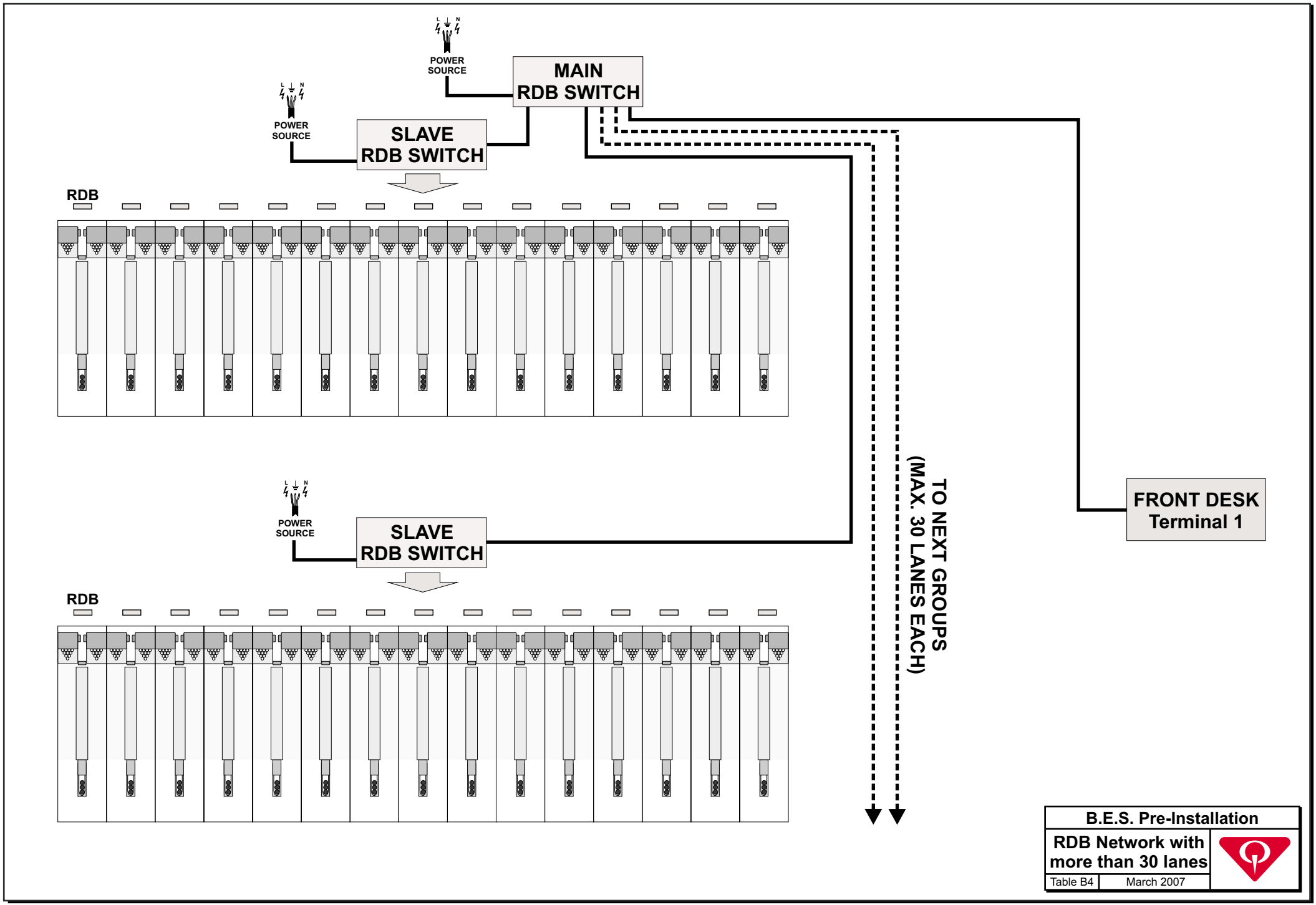
POWER SOURCE
MAIN RDB SWITCH
POWER SOURCE
SLAVE RDB SWITCH
RDB
POWER SOURCE
SLAVE RDB SWITCH
RDB
TO NEXT GROUPS (MAX. 30 LANES EACH)
FRONT DESK Terminal 1
B.E.S. Pre-Installation
RDB Network with more than 30 lanes
Table B4
March 2007

Monitor Cables	
M1	Red
M2	Green
M3	Blue

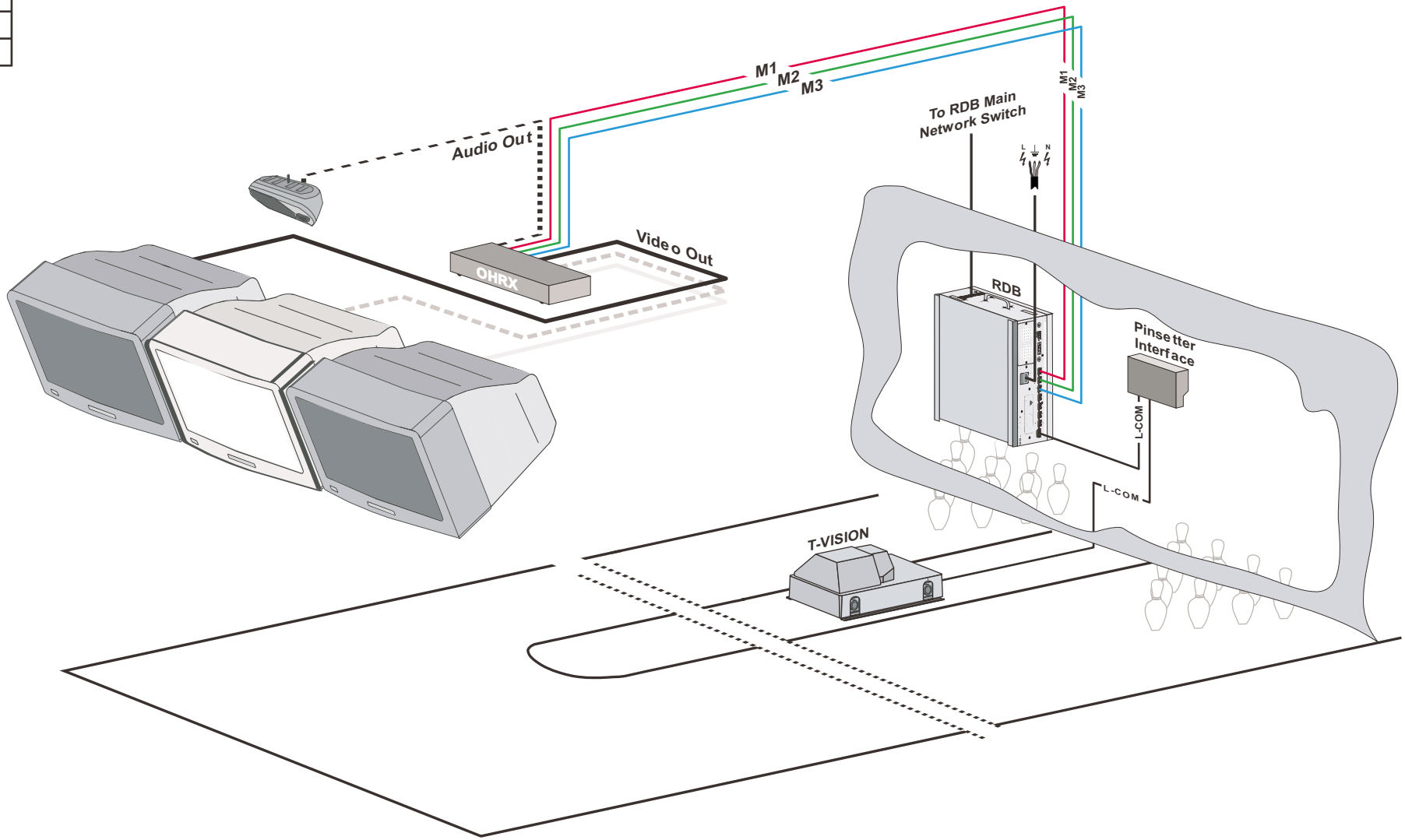

B.E.S. Pre-Installation

Overhead Monitors
No Console

Table B5 | March 2007

Monitor Cables	
M1	Red
M2	Green
M3	Blue

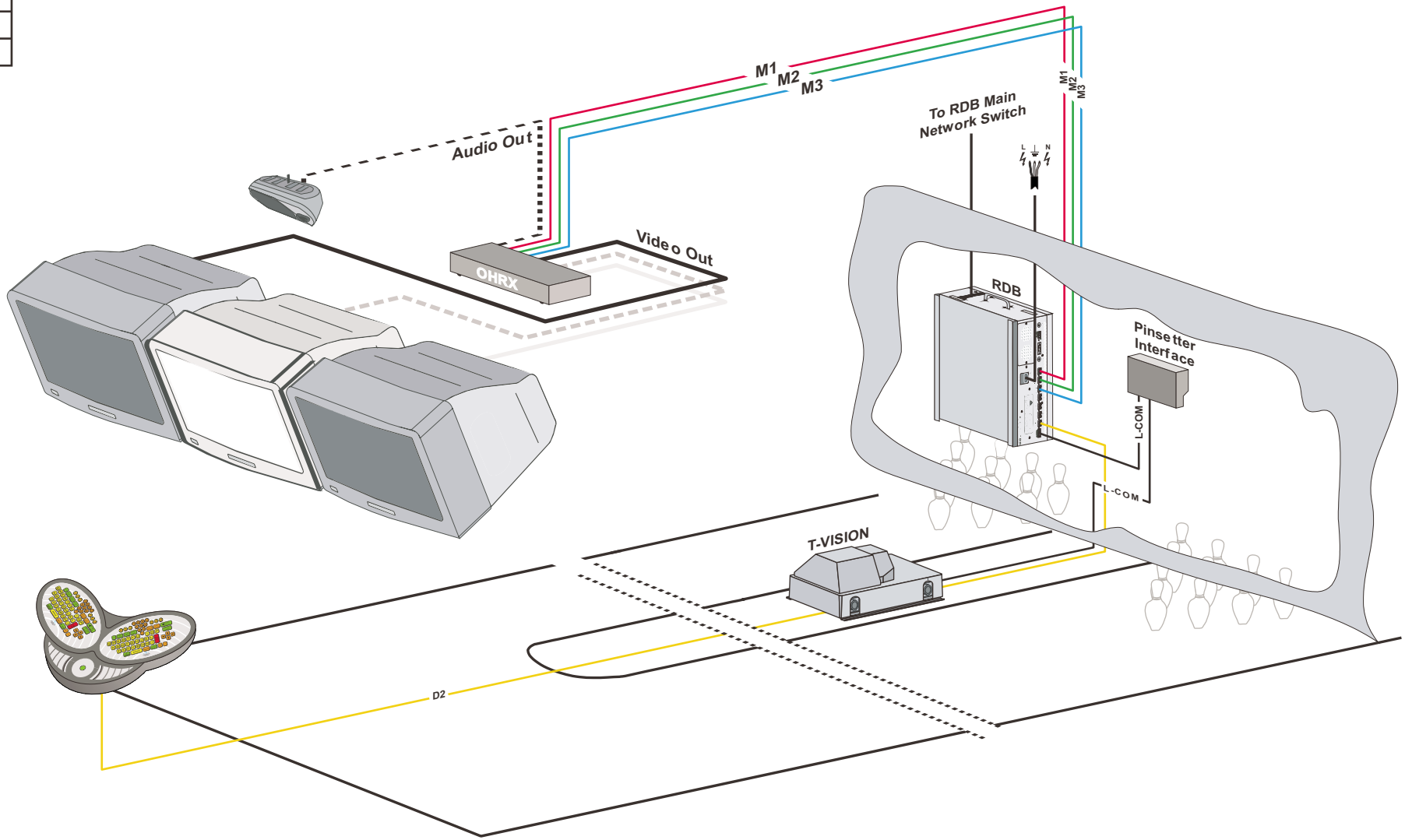

Keypad Console Cable	
D2	Yellow

B.E.S. Pre-Installation

Overhead Monitors Fly Console

Table B6 | March 2007

Monitor Cables	
M1	Red
M2	Green
M3	Blue

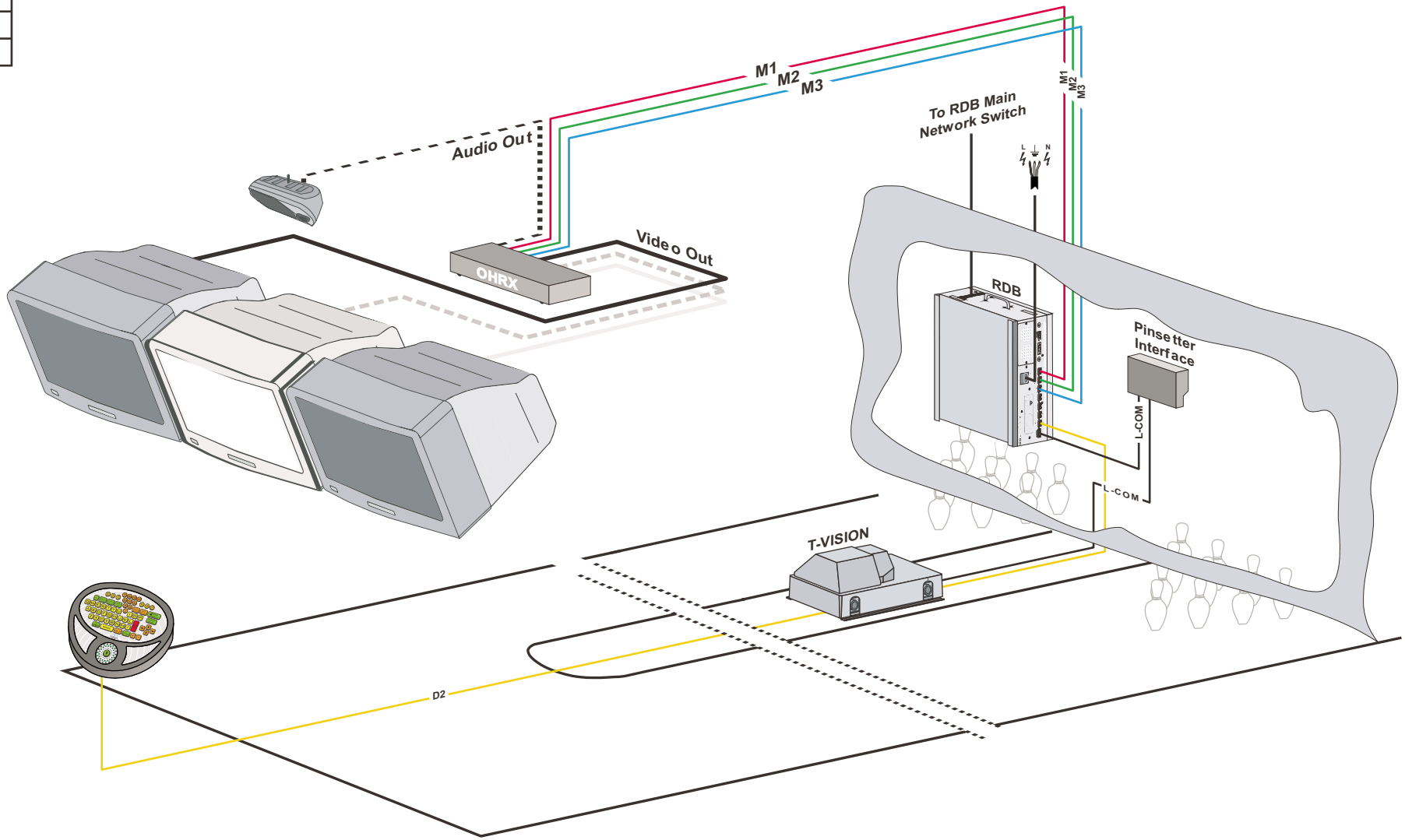

Keypad Console Cable	
D2	Yellow

B.E.S. Pre-Installation

Overhead Monitors
Micro II Console

Table B7 | March 2007

Monitor Cables	
M1	Red
M2	Green
M3	Blue

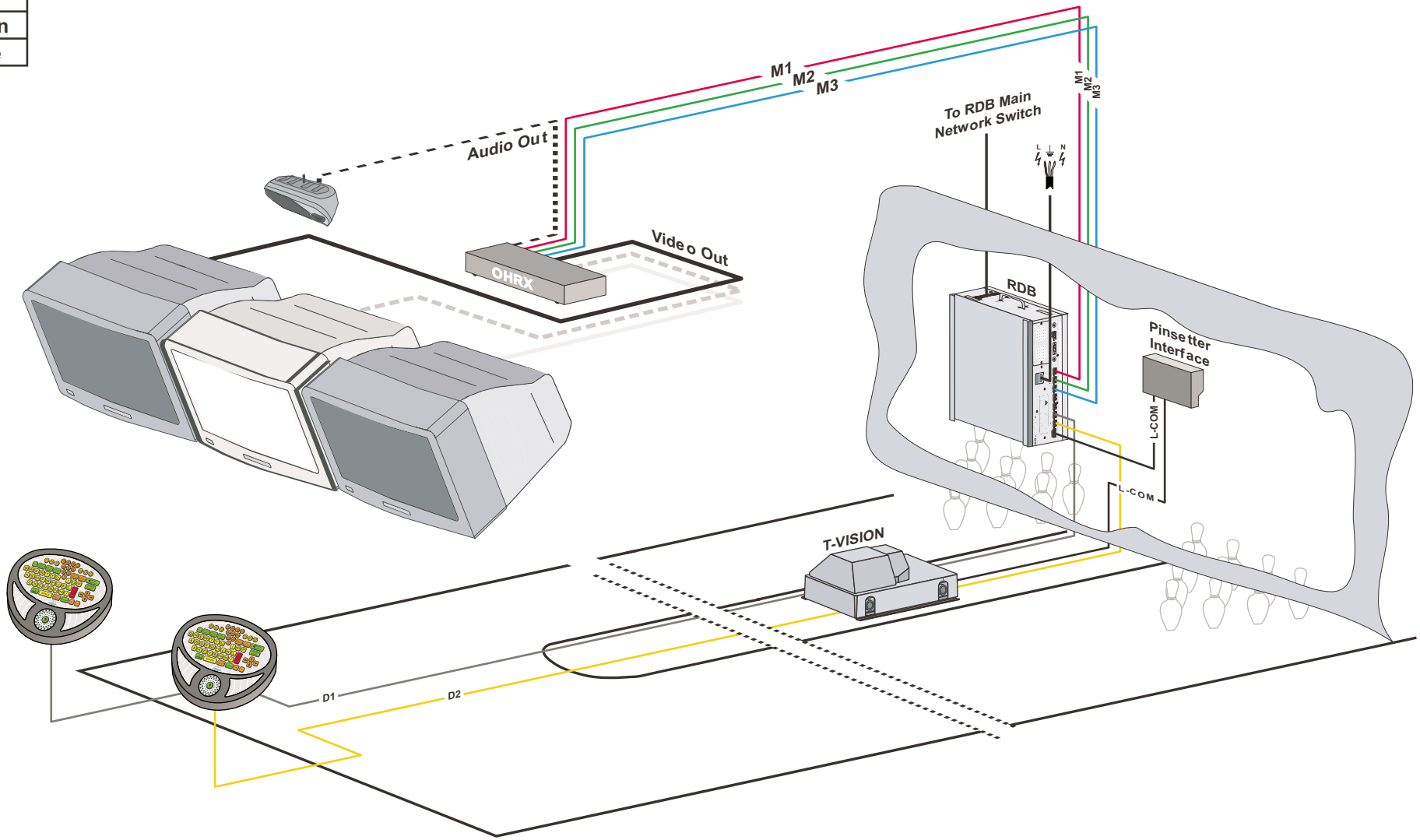

Keypad Console Cables	
D1	Grey
D2	Yellow

B.E.S. Pre-Installation

Overhead Monitors
Micro I Console

Table B8 | March 2007

Monitor Cables	
M1	Red
M2	Green
M3	Blue

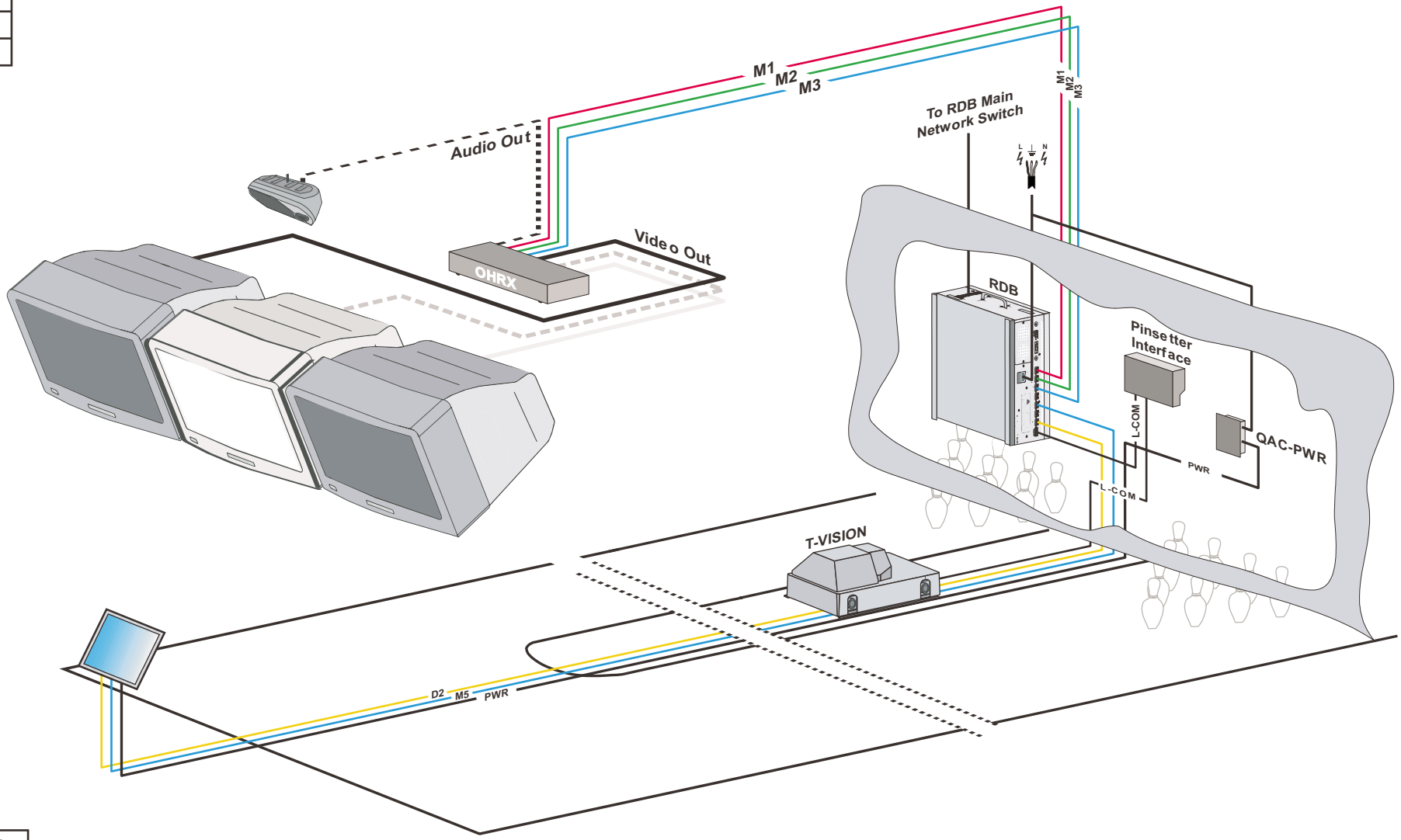

LCD Console Cables	
D2	Yellow
M5	Blue
PWR	Gray

B.E.S. Pre-Installation	
Overhead Monitors Single LCD	
Table B9	March 2007

Monitor Cables	
M1	Red
M2	Green
M3	Blue

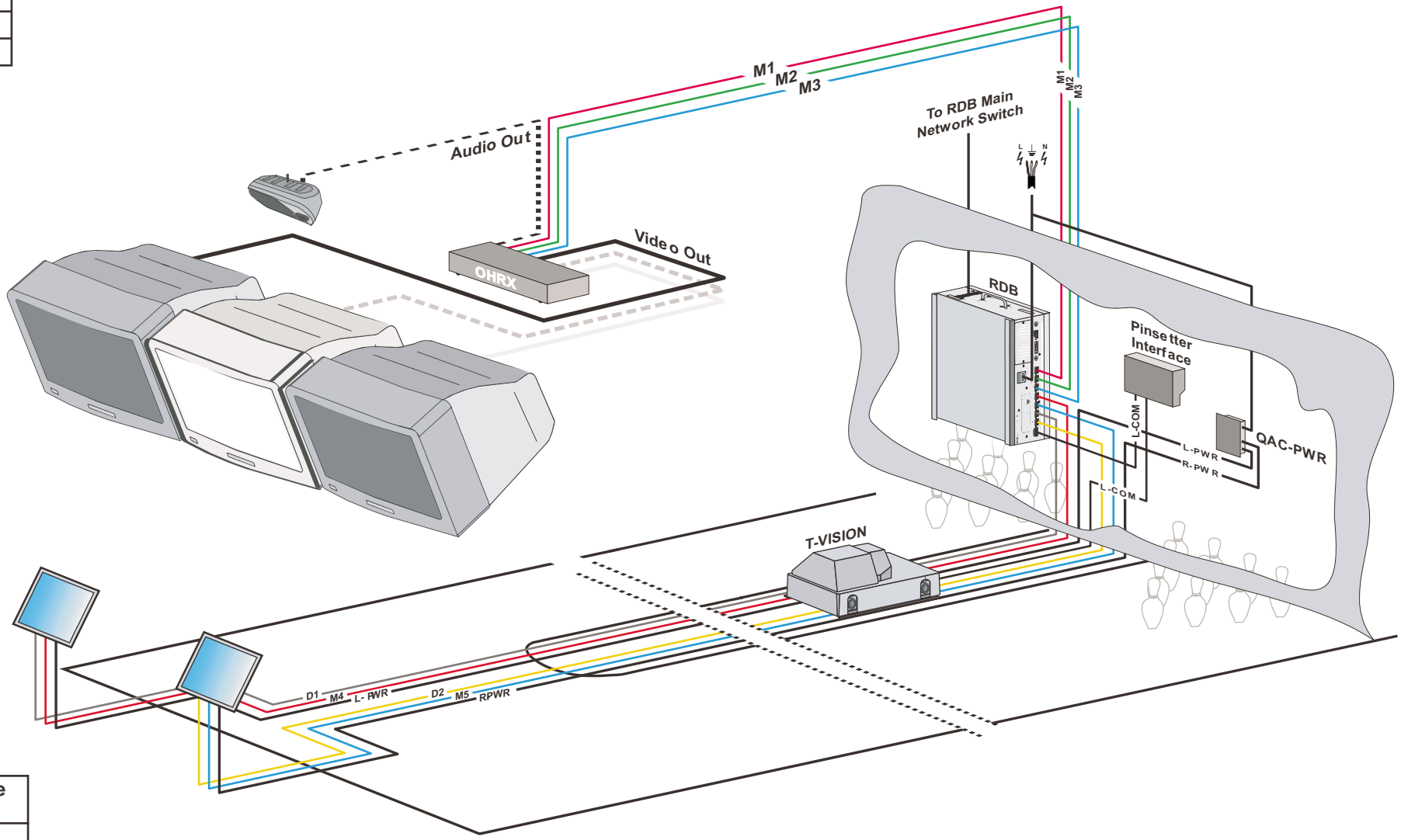

LCD Console Cables	
D1	Grey
D2	Yellow
M4	Red
M5	Blue
PWR	Gray

B.E.S. Pre-Installation	
Overhead Monitors Double LCD	
Table B10	March 2007

Monitor Cables	
M1	Red
M2	Green
M3	Blue

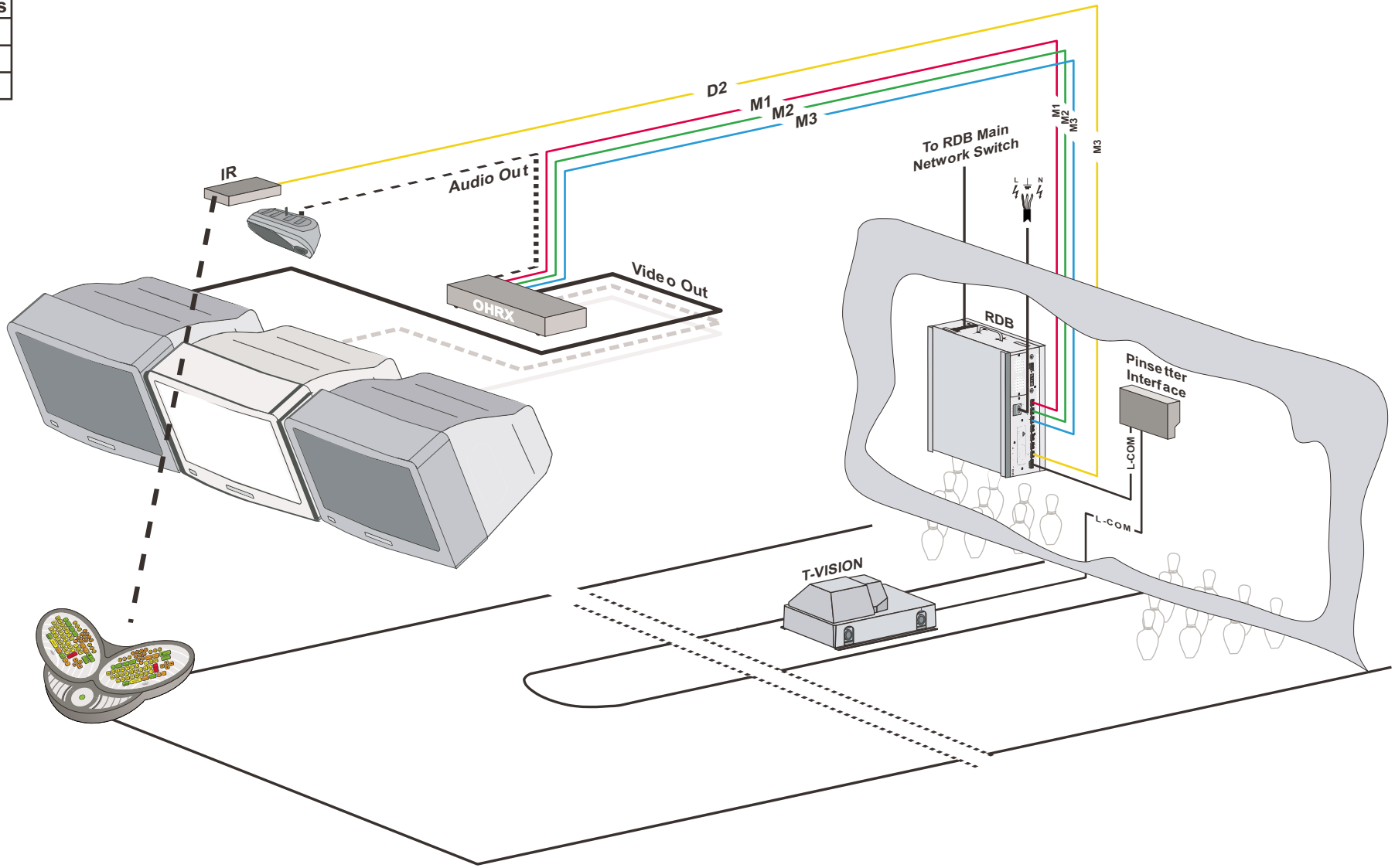

Keypad Console Cable	
D2	Yellow

B.E.S. Pre-Installation	
Overhead Monitors IR Fly Console	
Table B11	March 2007

Monitor Cables	
M1	Red
M2	Green
M3	Blue

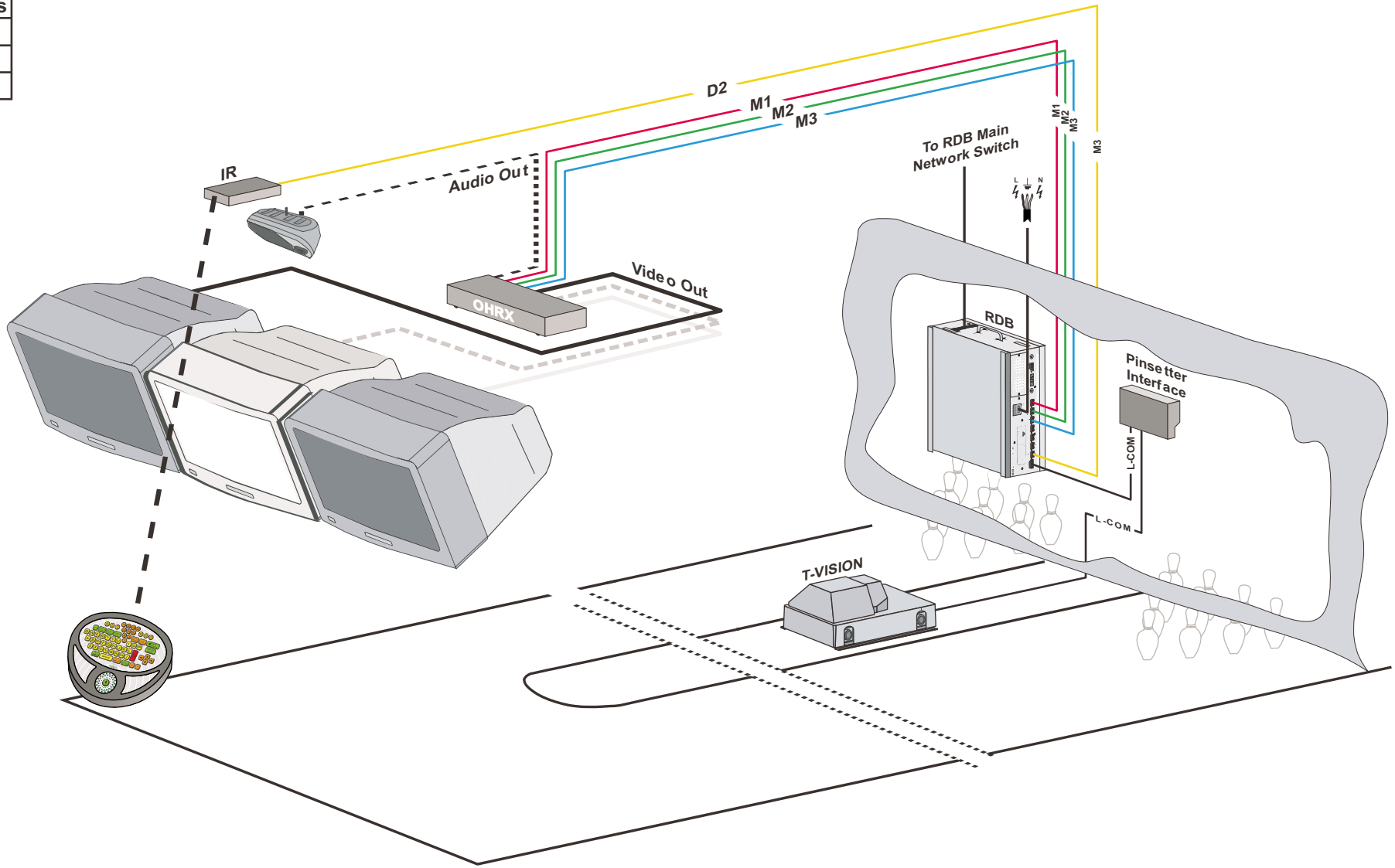

Keypad Console Cable	
D2	Yellow

B.E.S. Pre-Installation

Overhead Monitors
IR Micro II Console

Table B12 | March 2007

Monitor Cables	
M1	Red
M2	Green
M3	Blue

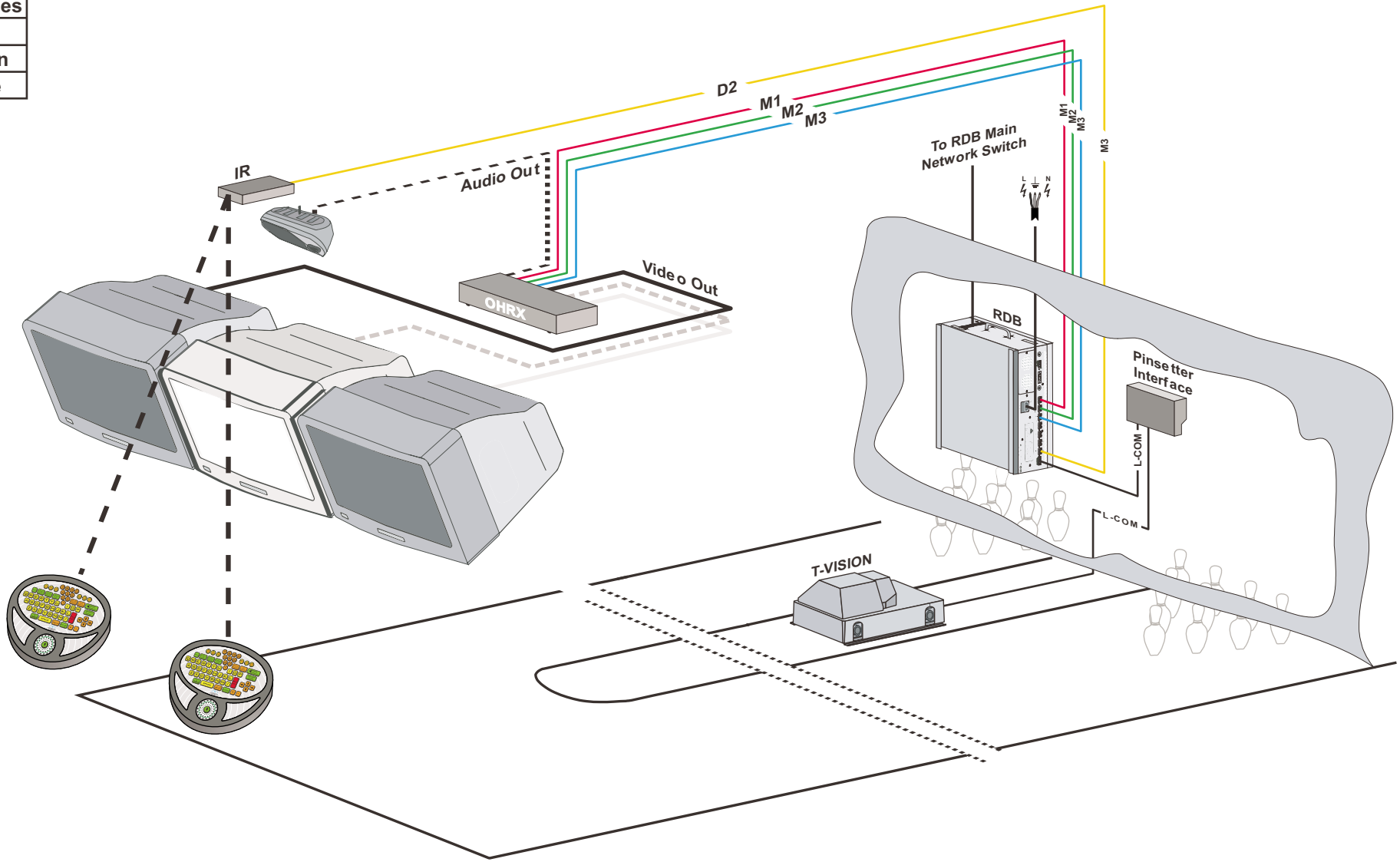

Keypad Console Cable	
D2	Yellow

B.E.S. Pre-Installation	
Overhead Monitors IR Micro I - Near	
Table B13	March 2007

Monitor Cables	
M1	Red
M2	Green
M3	Blue

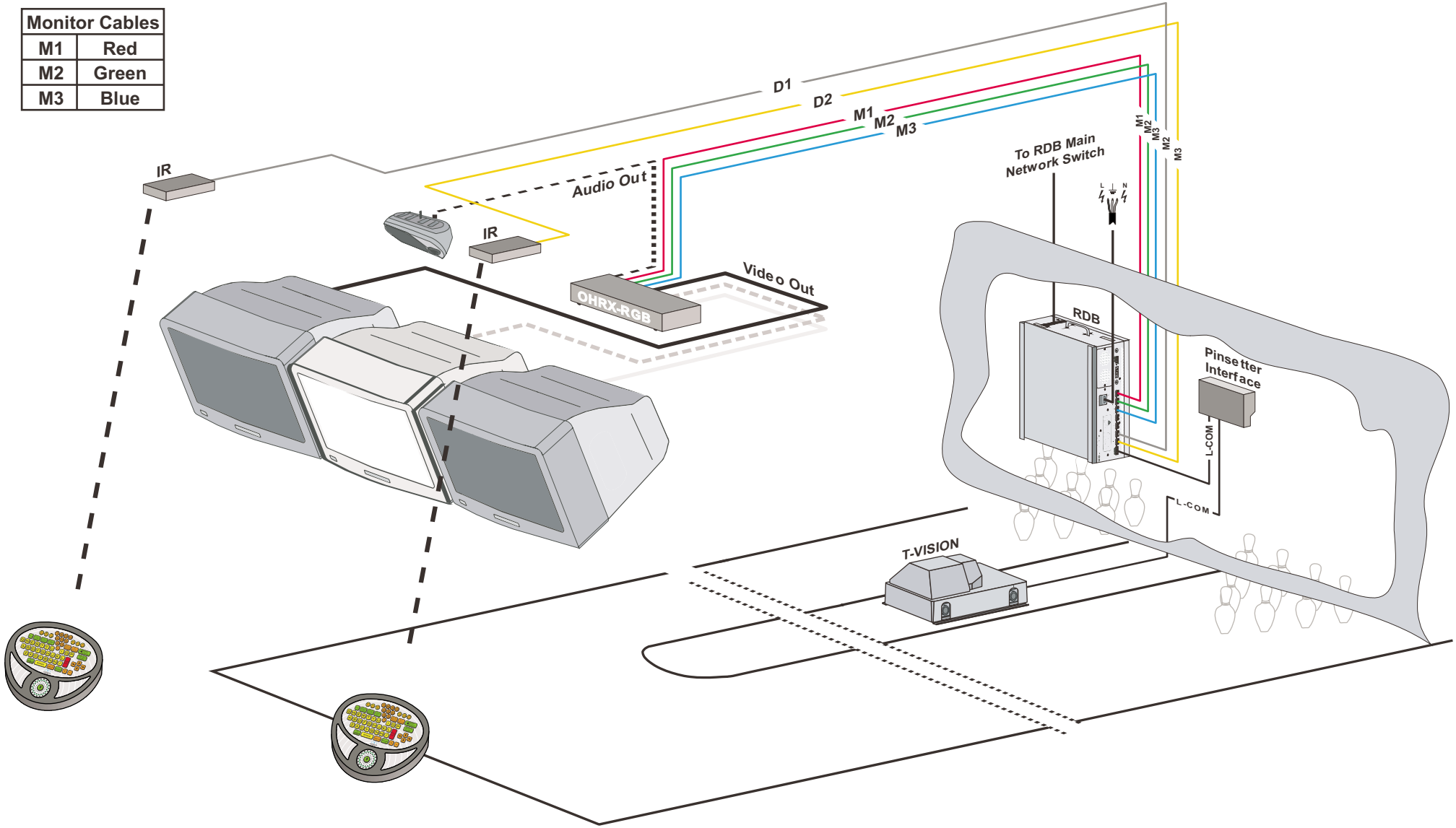

Keypad Console Cables	
D1	Grey
D2	Yellow

B.E.S. Pre-Installation	
Overhead Monitors IR Micro I - Far	
Table B14	March 2007

C. Structural Requirements

C.1.1 RDB Graphic Unit

The RDB graphic unit is mounted on the curtain wall, centered between each pair of pinspotters. The curtain wall will have to support a load of 35 Lbs – 16 Kg above each pair of pinspotters.

RDB Unit

Heigth	350 mm	13.77"
Length	315 mm	12.40"
Depth	154 mm	6.06"
Weight	8.8 Kg	19.40 lbs

C.1.2 RDB Network Hub

The Network Hub is placed on the curtain wall,at the middle of the lanes. When more groups of lanes are present, the hubs are each placed at the middle of groups, on the curtain wall.

Network Hub Approximate Dimensions

Heigth	50 mm	1.96"
Length	300 mm	11.81"
Depth	200 mm	7.87"

C.1.3 OHRX - OHRGB - OHVGA Interface

The OH interfaces are located on the false ceiling, near the Overhead Monitors.

OHRX Dimensions

Heigth	50 mm	1.96"
Length	267 mm	10.51"
Depth	177 mm	6.96"
Weight	1.3 Kg	2.86 lbs

OHRGB - OHVGA Dimensions

Heigth	42 mm	1.65"
Length	264 mm	10.39"
Depth	175 mm	6.89"
Weight	1.3 Kg	2.86 lbs

C.1.4 Overhead Monitors

Overhead monitors are installed over the approach in the ball return area..
Static load weights for different configurations as follows:

- Double 28" Monitors: 300 Lbs - 136 Kg
- Triple 28" Monitors: 400 Lbs - 182 Kg
- Double 34" Monitors: 450 Lbs - 204 Kg
- Triple 34" Monitors: 675 Lbs - 306 Kg
- Double 38" Monitors: 700 Lbs - 318 Kg
- Double Plasma Screens: 300 Lbs - 136 Kg

See Tables C1-C8

C.1.5 Front Desk PC

Front Desk PC Approximate Dimensions

Heigth	500 mm	19.68”
Length	300 mm	11.81”
Depth	600 mm	23.62”

C.1.6 Micro Console

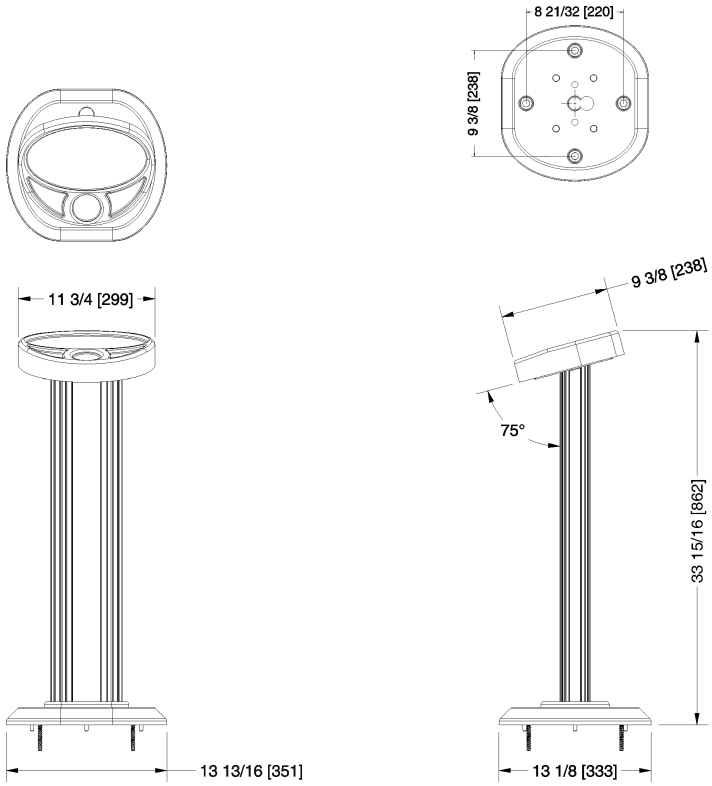

C.1.7 Fly Console

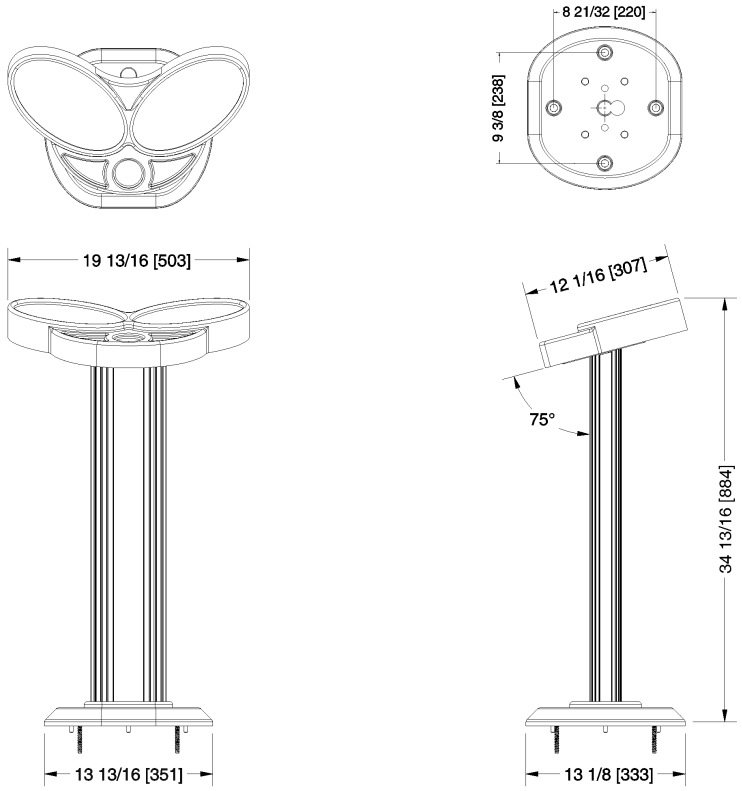

C.1.8 LCD Arch Console

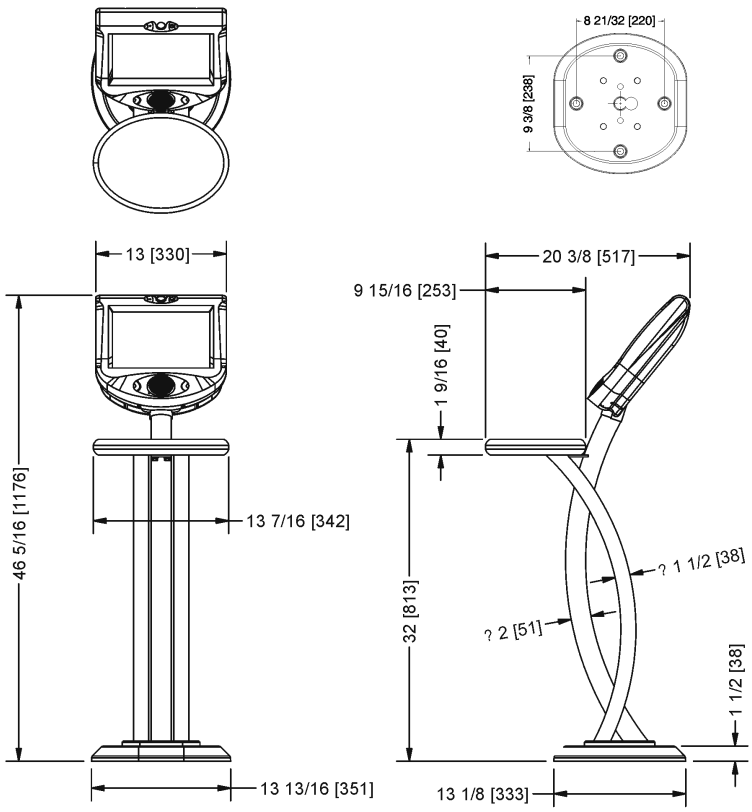

300 Lbs
136 Kg

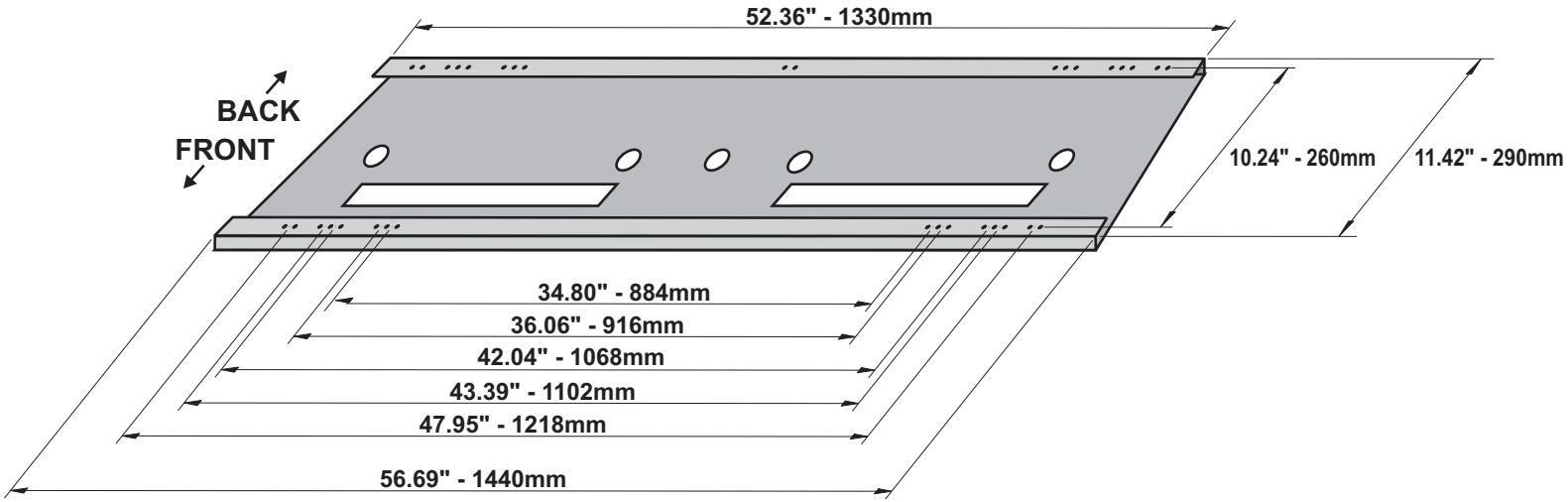

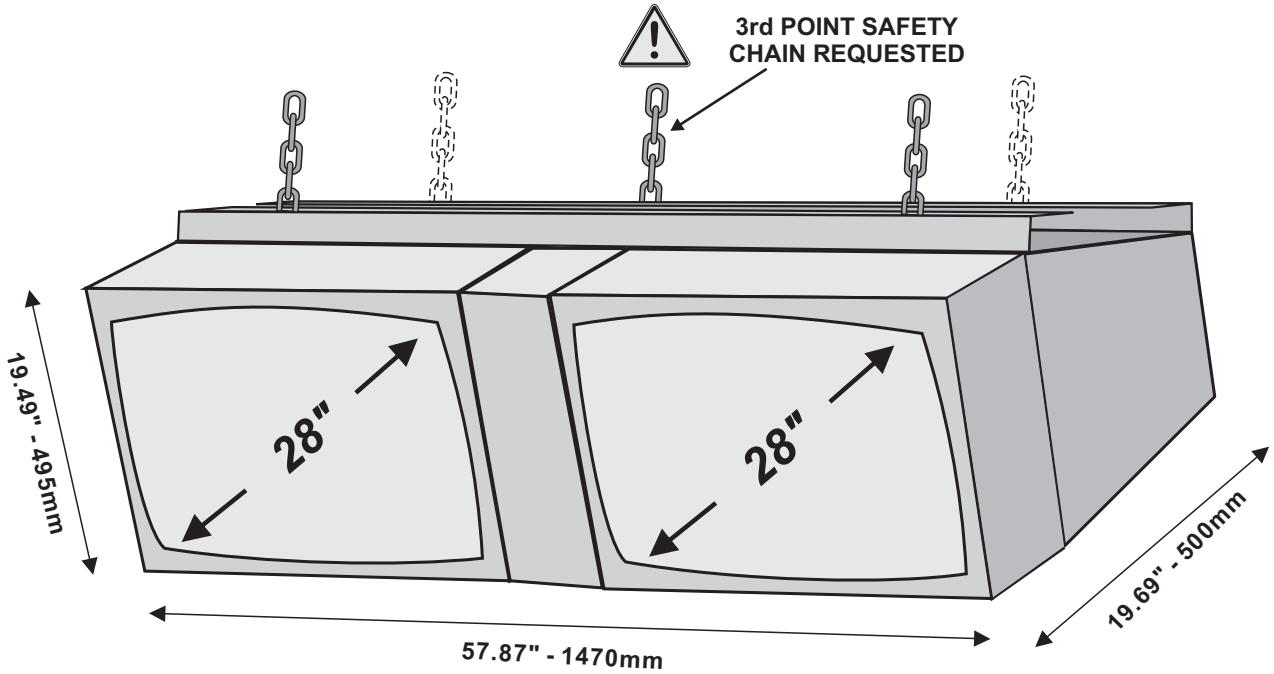

B.E.S. Pre-Installation	
Double 28” Monitors	
Table C1	March 2007

400 Lbs
182 Kg

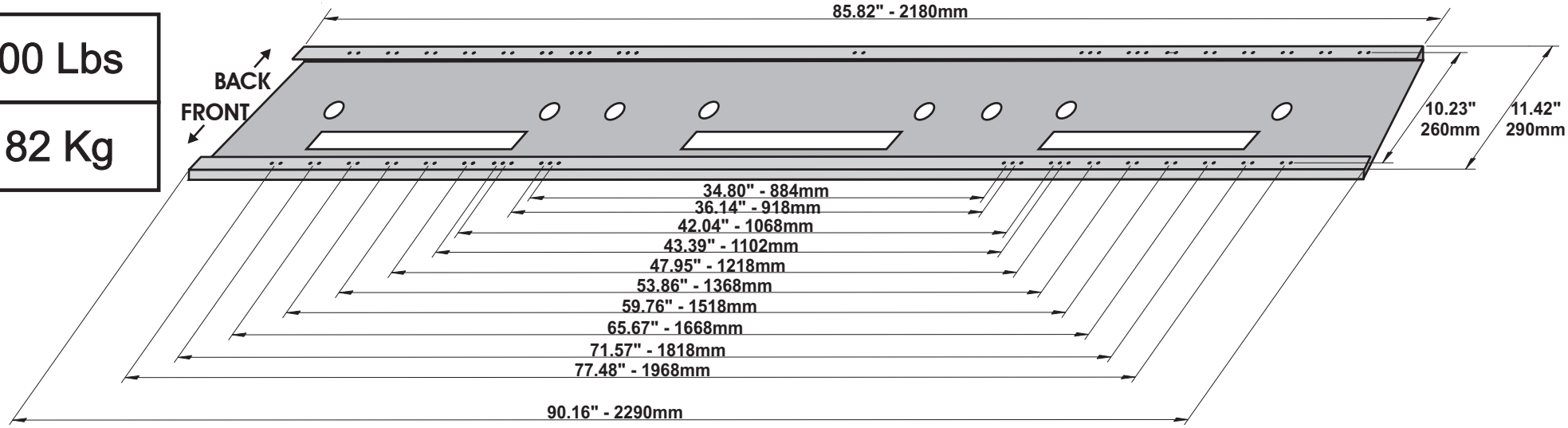

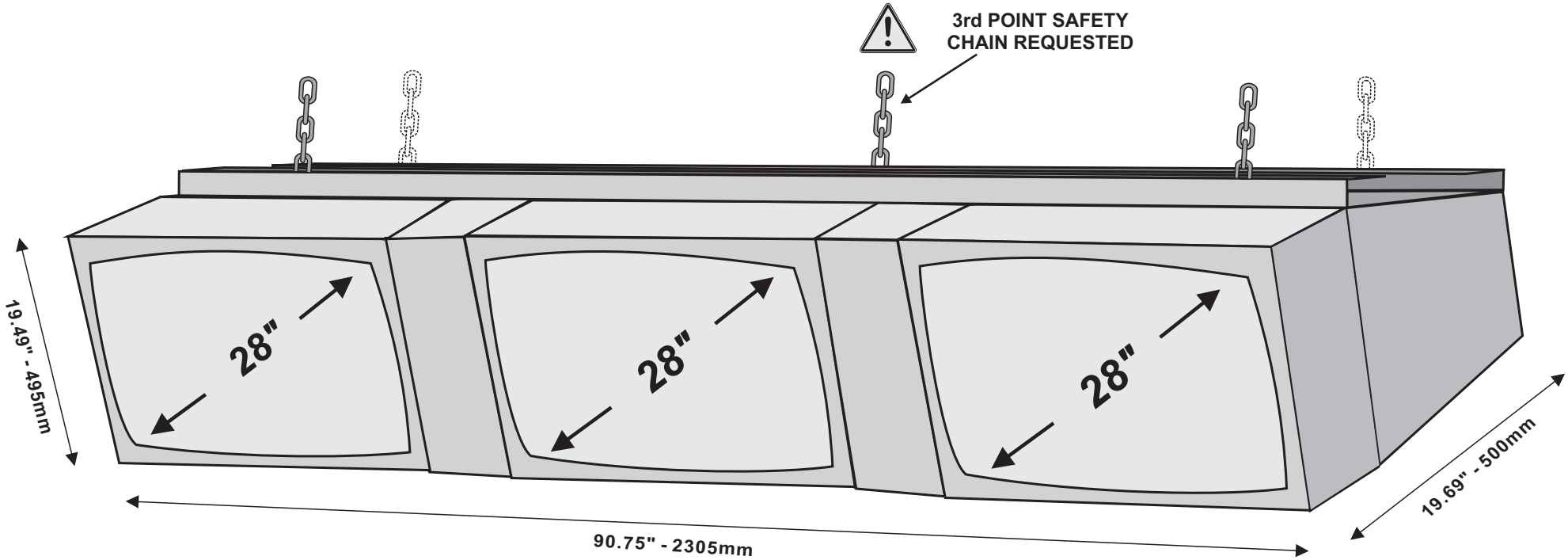

B.E.S. Pre-Installation	
Triple 28” Monitors	
Table C2	March 2007

450 Lbs
204 Kg

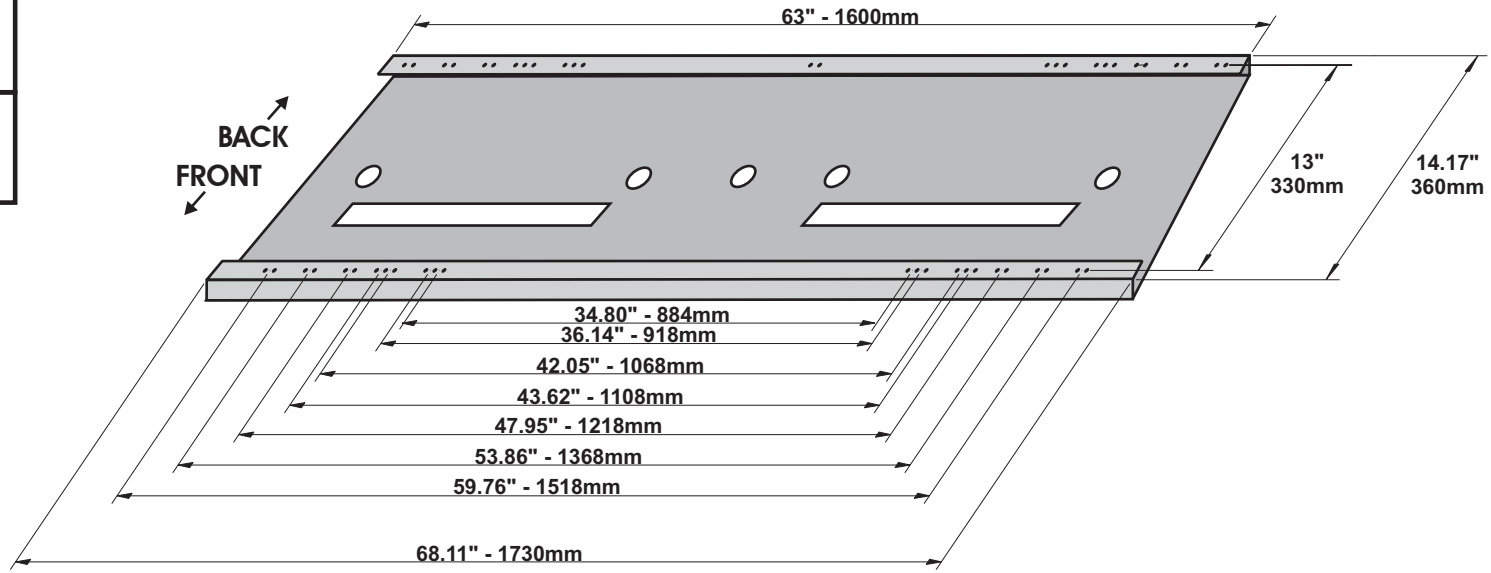

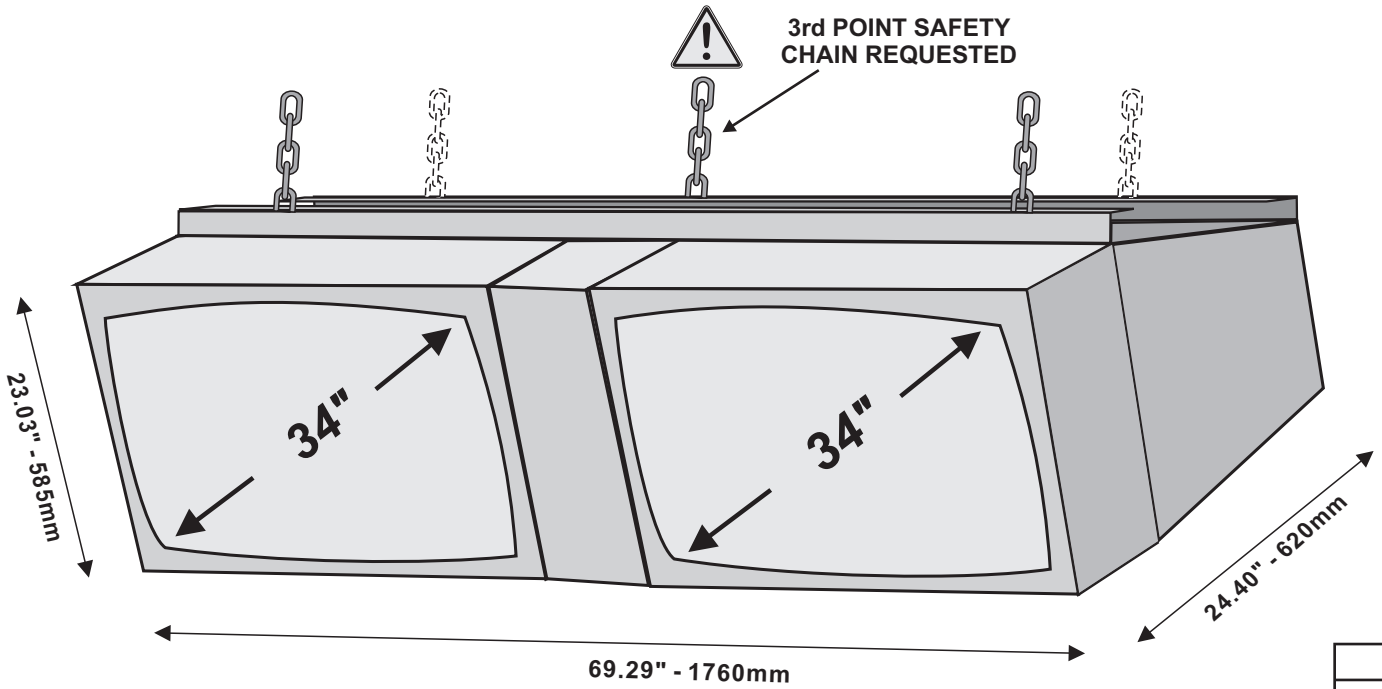

B.E.S. Pre-Installation	
Double 34” Monitors	
Table C3	March 2007

675 Lbs

306 Kg

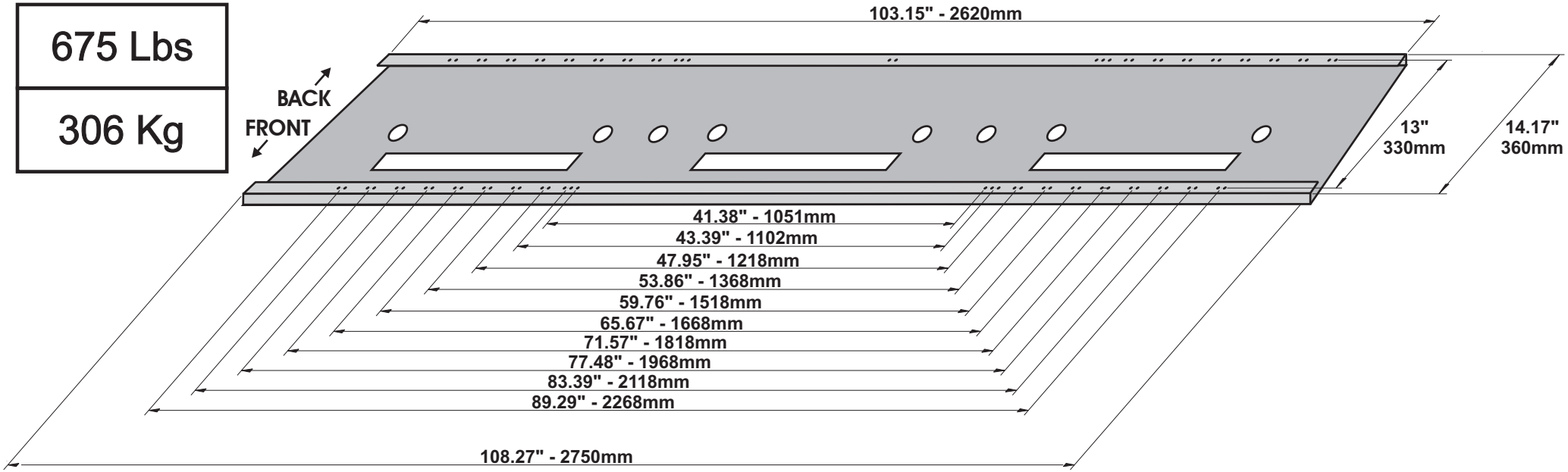

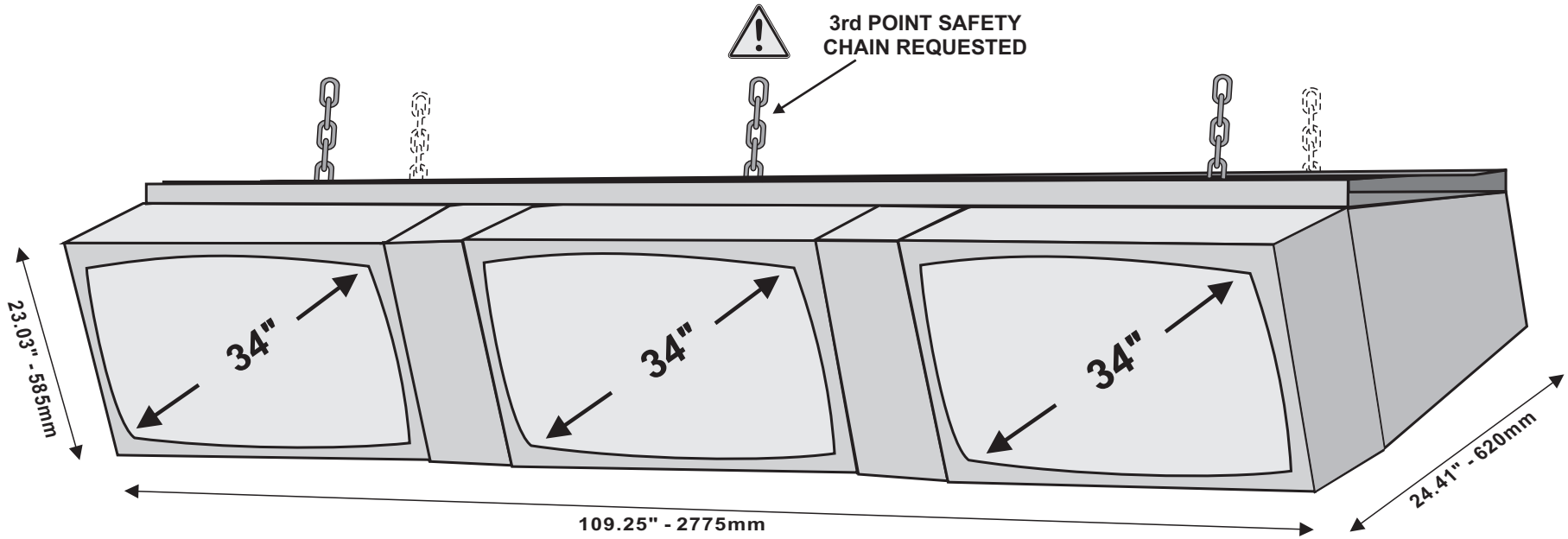

B.E.S. Pre-Installation	
Triple 34” Monitors	
Table C4	March 2007

700 Lbs
318 Kg

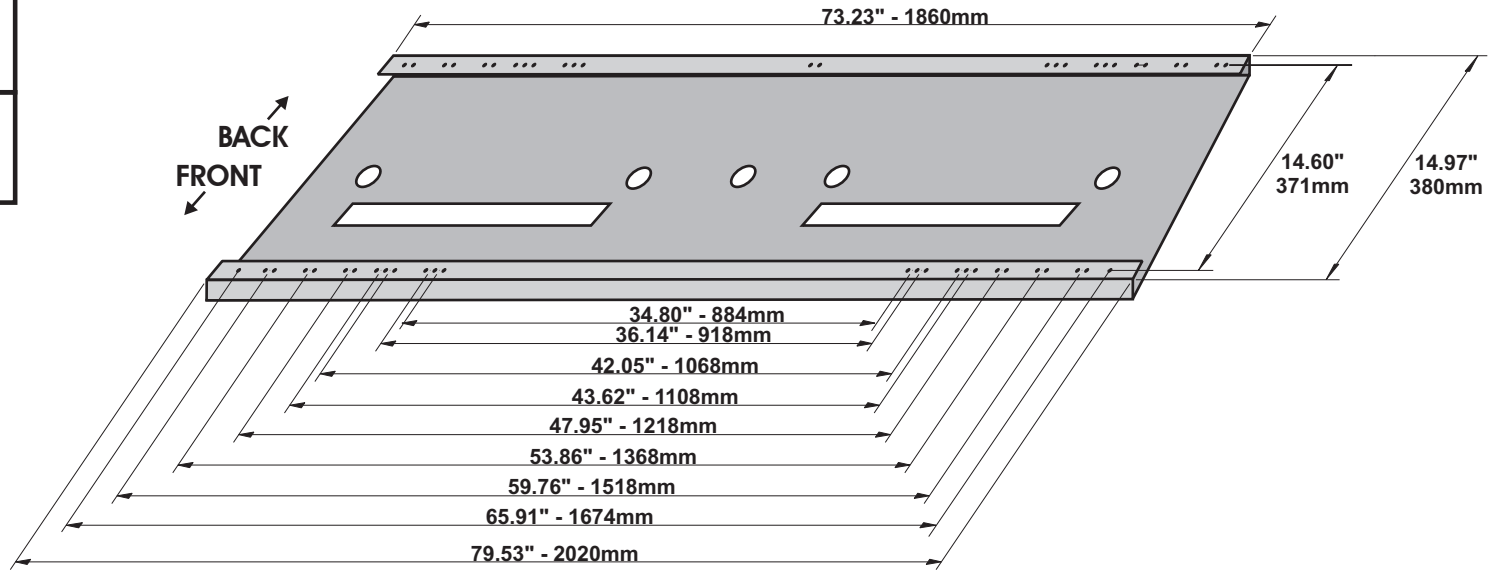

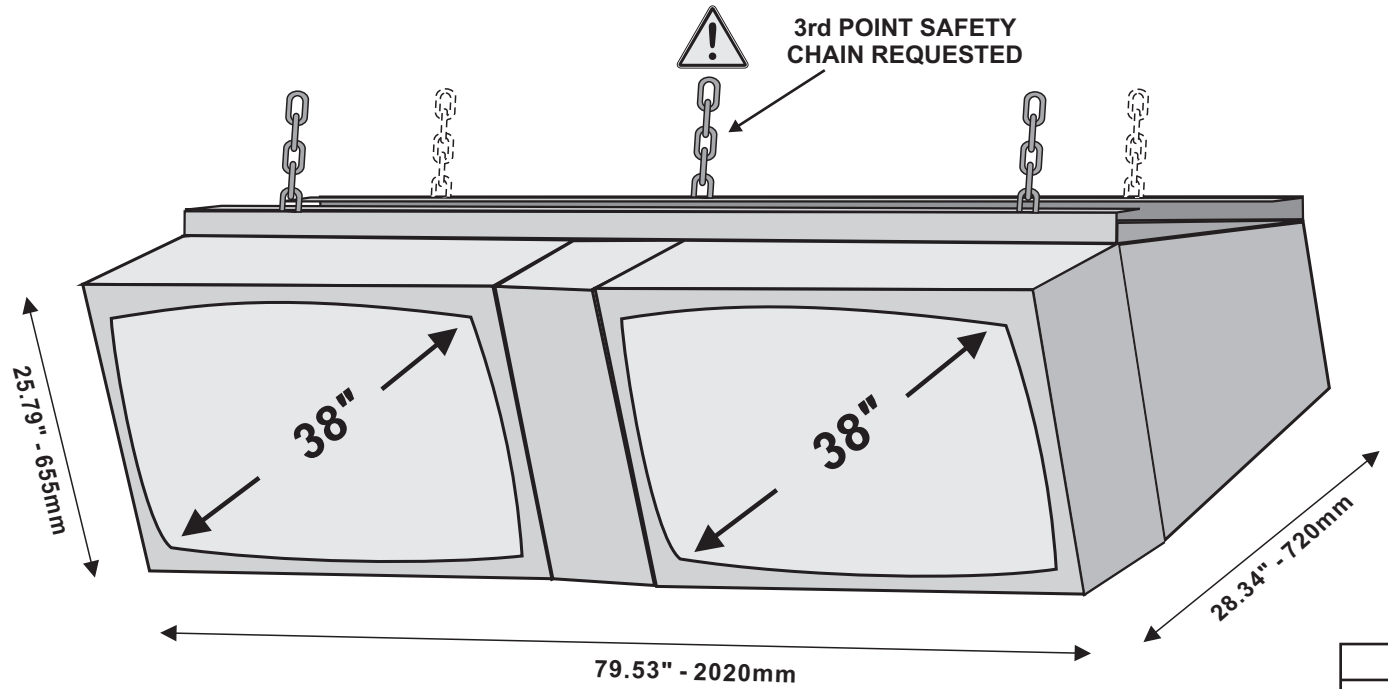

B.E.S. Pre-Installation	
Double 38” Monitors	
Table C5	March 2007

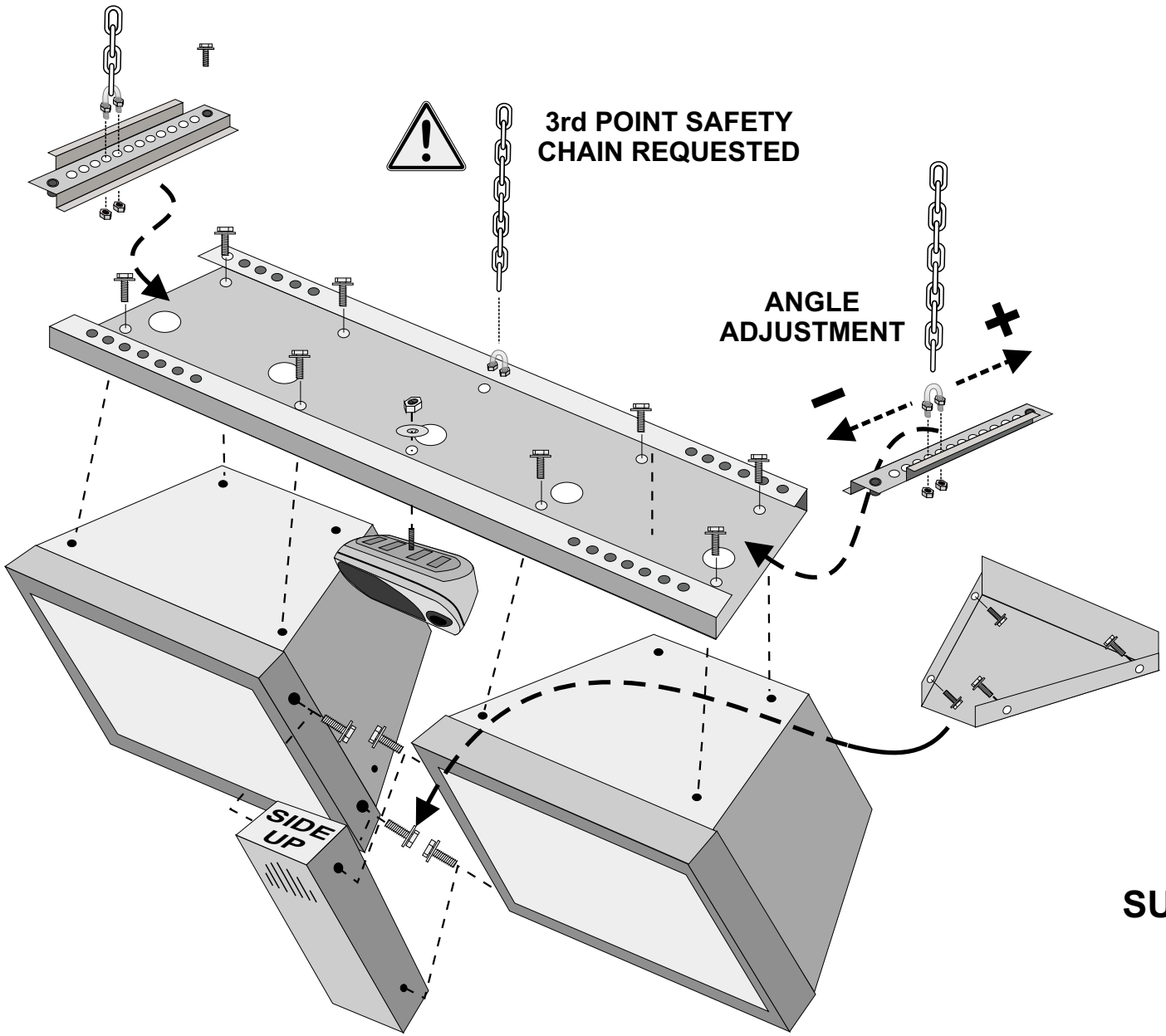

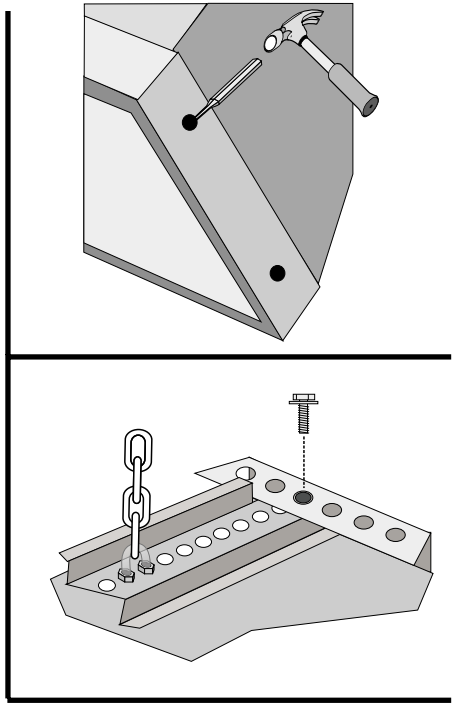

CHAINS ARE NOT SUPPLIED BY QUBICA

FOR POST INSTALLATION SERVICE DUTIES, PLEASE ALLOW SUFFICIENT GAP ABOVE MONITORS FOR SERVICE PERSONNEL

B.E.S. Pre-Installation	
Monitor Assembler Installation	
Table C6	March 2007

300 Lbs
136 Kg

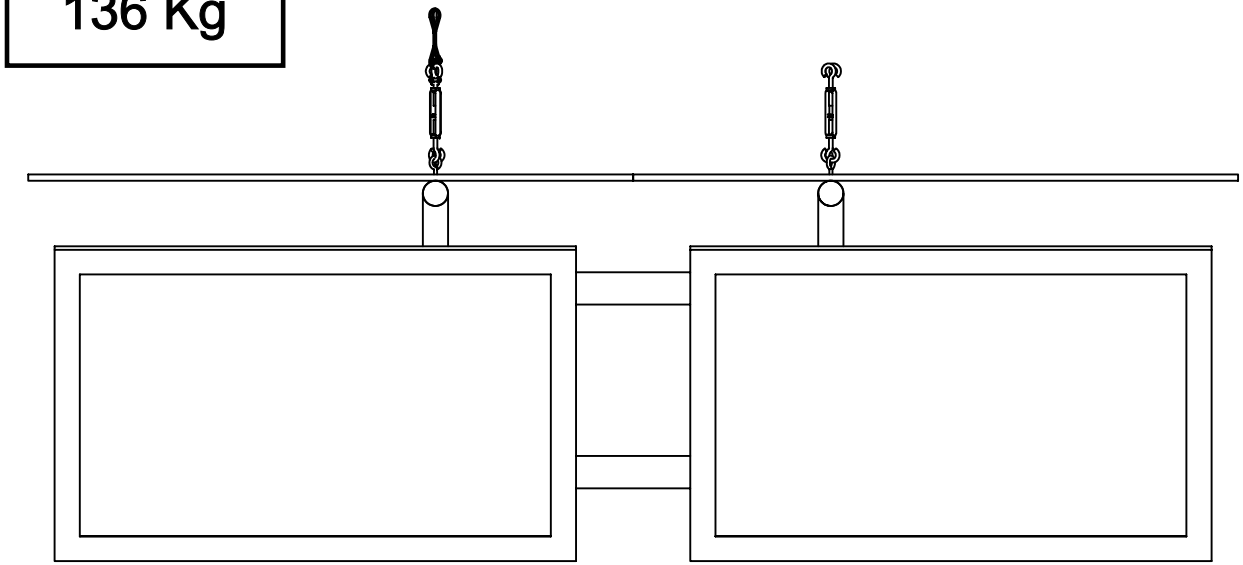

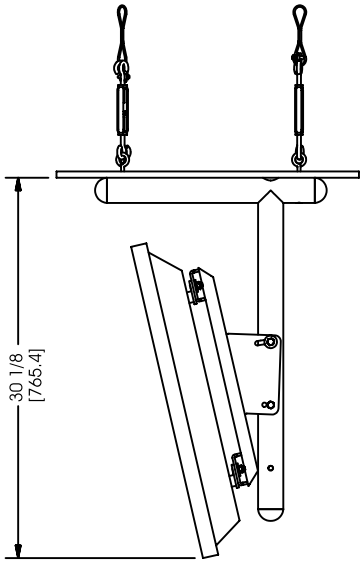

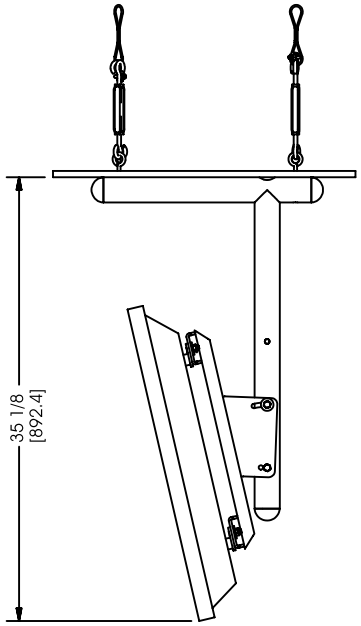

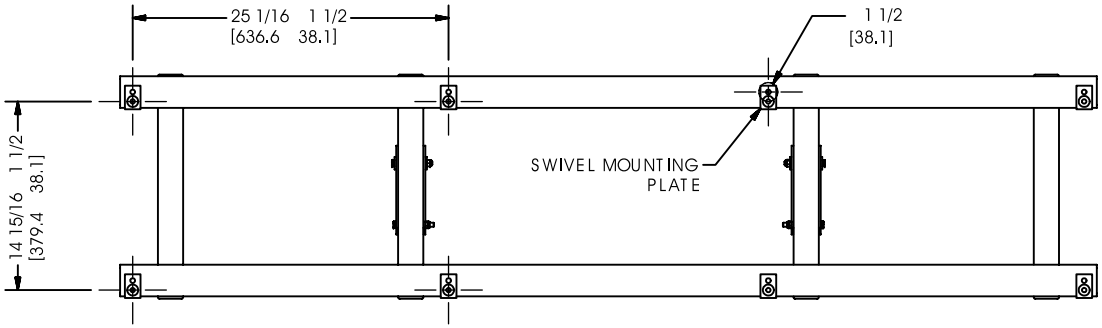

B.E.S. Pre-Installation	
Double Plasma Screens	
Table C7	March 2007

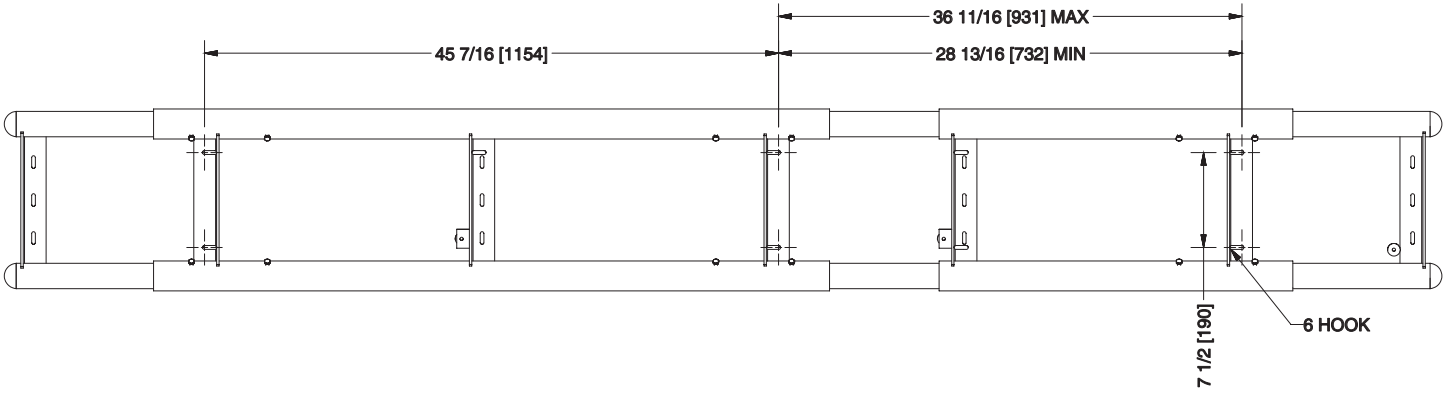

SPECIFICATION:
-FRAME WEIGHT 3TV: 185Lb [84Kg]
-MAX WEIGHT CAPACITY: 170Lb [77Kg.] PER TV

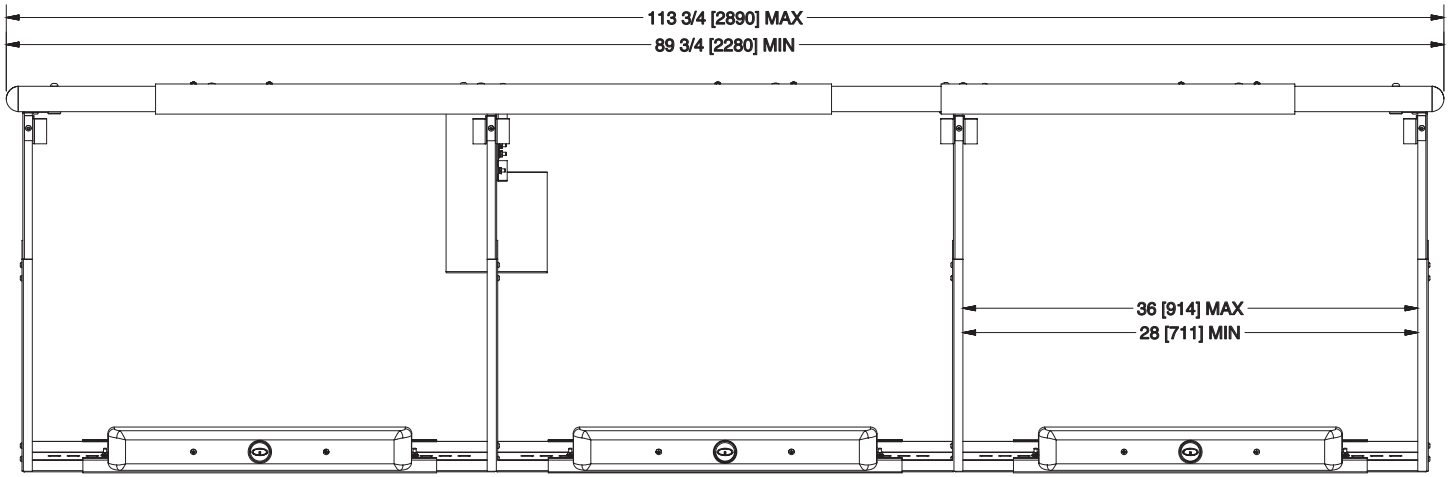

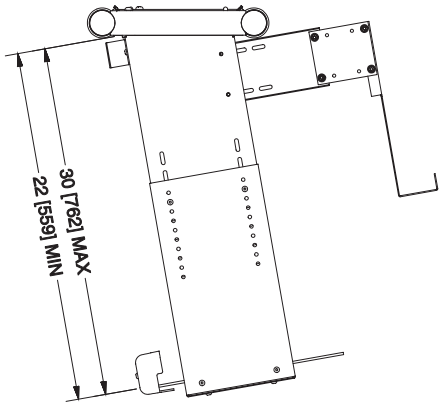

B.E.S. Pre-Installation	
Universal Assembler Installation	
Table C8	March 2007